LINETRAXX® RCMS460/RCMS490

Multi-channel residual current monitors

for earthed AC, DC and AC/DC systems (TN and TT systems)
AC, pulsed DC and AC/DC sensitive



RCMS460-490_D00067_05_D_XXEN/07.2023

BENDER

LINETRAXX® RCMS460/RCMS490

Multi-channel AC, pulsed DC and AC/DC sensitive residual current monitors for earthed AC, DC and AC/DC systems (TN and TT systems)



Device features

- Optional AC, pulsed DC or AC/DC sensitive measurement by selecting the respective measuring current transformer for each channel
- True r.m.s. value measurement
- 12 measuring channels per device for residual current measurement or digital input
- Up to 90 RCMS… monitors, up to1080 measuring channels in the system
- Fast parallel scanning for all channels
- Response ranges:
  10 mA…10 A (0…2000 Hz),
  6 mA…20 A (42…2000 Hz),
  100 mA…125 A (42…2000 Hz) RCMS…-D4
- Preset function
- Adjustable time delays
- The frequency response characteristics can be set for the protection of persons, fire and plant protection
- History memory with date and time stamp for 300 data records
- Data logger for 300 data records/channel
- Analysis of the harmonics, DC, THF
- Two alarm relays with one changeover contact each
- Device version RCMS490 with one alarm contact per channel
- N/O or N/C operation and fault memory selectable
- Connection external test/reset button
- Backlit graphical display (7-segment display) and alarm LEDs
- Data exchange via BMS bus
- Password protection for device setting
- Continuous CT connection monitoring
- RoHS compliant

Product description RCMS460-D…/-L… and RCMS490-D…/-L…

The RCMS system consists of one or more RCMS460-D/-L or RCMS490-D/-L residual current monitors, which are able to detect and evaluate fault, residual and operating currents in earthed power supplies via the related measuring current transformers.
The maximum voltage of the system to be monitored depends on the nominal insulation voltage of the measuring current transformer used in the case of busbar systems, resp. depend on the cables or conductors that are routed through.

Closed CTBS25 or CTUB100 series measuring current transformers are required to measure AC/DC sensitive residual currents (according to IEC/TR 60755: Type B). They require one 24 V DC power supply unit (e.g. STEP-PS series).
CTAC… (closed), WR (rectangular), WS (split-core) and WF… (flexible) series measuring current transformers are used for alternating and pulsating currents (according to IEC/TR 60755: Type A).

Any combination of the various measuring current transformer series can be connected to the evaluator measuring channels.
Each RCMS460-D/-L and RCMS490-D/-L has 12 measuring channels. Up to 90 residual current monitors can be connected via a BMS bus (RS-485 interface with BMS protocol), thereby up to 1080 measuring channels (sub-circuits) can be monitored.

If this product is used for personnel protection, fire or plant protection, the frequency response can be set accordingly. The measured currents can be analysed for harmonics.

Typical applications

- Measuring and evaluating residual, fault and rated currents of loads and installations in the frequency range of
  - 0…2000 Hz (CTUB100 or CTBS25 series measuring current transformers)
  - 42…2000 Hz (CTAC…, WR…, WS…, WF… series measuring current transformers)
- Monitoring of currents regarded as fire hazards in flammable atmospheres
- EMC monitoring of TN-S systems for “stray currents” and additional N-PE connections.
- Monitoring of N conductors for overload caused by harmonics
- Monitoring of PE and equipotential bonding conductors to ensure they are free of current
- Residual current monitoring of stationary electrical equipment and systems to determine test intervals which meet practical requirements in compliance with the accident prevention regulations DGUV V3 (Germany).
- Personnel and fire protection due to rapid disconnection
- Monitoring of digital inputs

Function

The currents are detected and evaluated as true r.m.s. values in the frequency range of 0(42)…2000 Hz. All channels are scanned simultaneously so that the maximum scanning time for all channels is ≤180 ms if 1 x the response value is exceeded and ≤ 30 ms if 5 x the response value is exceeded.

The latest current values of all channels are shown on the LC display in bar graph format. If one of the two set response values is exceeded, the response delay ton begins. Once the response delay has elapsed, the common alarm relays “K1/K2” switch and the alarm LEDs 1/2 light up.

Two response values/common alarm relays, which can be set separately, allow a distinction to be made between prewarning and main alarm. The faulty channel(s) and the associated measured value are indicated on the LC display.
If the current falls below the release value (response value plus hysteresis), the release delay “toff” t_{off} begins. When the release delay has elapsed, the common alarm relays switch back to their initial state.

If the fault memory is enabled, the common alarm relays remain in the alarm state until the reset button is pressed or a reset command is sent via the BMS bus. The device function can be tested using the test button. Parameters are assigned to the device via the LC display and the control buttons on the front panel of one of the connected RCMS…-D devices or via connected panels, Ethernet gateways (COM465IP) and Condition Monitors (COMTRAXX CP9…).

With the adjustable preset function the response values can set for all channels taking the latest measured value for each channel into account.

Digital input
Each individual channel can be used for one of the following monitoring functions:

- As digital input using a potential-free contact 1/0
- Or for current or residual current monitoring in combination with measuring current transformers.

History memory in RCMS460-D, RCMS490-D

The device utilises a history memory for failsafe storing of up to 300 data records (date, time, channel, event code, measured value), so that all data about an outgoing circuit or an area can be traced back at any time (what happened when).

Analysis of harmonics

The analysis of the harmonics of the measured currents can be selected via a menu item in RCMS460-D, RCMS490-D. There, the DC component, the THF and the current value of the harmonics (1…40 at 50/60 Hz, 1…5 at 400 Hz) is displayed numerically and graphically.

Device variants

RCMS residual current monitoring systems differ in the type of residual current evaluator used. RCMS460… or RCMS490… are available as an option.

RCMS460-D
Device version RCMS460-D utilises a backlit graphical display. This version is applied when detailed information about all devices in the switchboard cabinet, connected to the bus, are to be displayed locally. This device is capable of assigning parameters to all RCMS devices connected to the BMS bus and displaying all measurement details. Several RCMS-D devices can be used in one system.

RCMS460-L
Device version RCMS460-L utilises a two-digit 7-segment display where the address of this device is displayed within the BMS bus. The alarm LEDs indicate in which measuring channel the response value has been exceeded. Parameters can be set via an RCMS…D, an Ethernet gateway (COM465IP) or a Condition Monitor (COMTRAXX CP9…).

RCMS490-D/RCMS490-L
The function of the device versions RCMS490-D/RCMS490-L corresponds to the function described above. In addition, a galvanically isolated alarm contact (N/O contact) is provided, for example, to trigger a circuit breaker in this sub-circuit when a response value has been exceeded or the value has fallen below the set response value.

RCMS…-D4/RCMS…-L4
The function of device version RCMS…-D4/RCMS…-L4 corresponds to the function described before. The functions of measuring channels k9 … k12 vary from those described before. They are exclusively designed for current measurements with type A measuring current transformers (measuring range 100 mA … 125 A). For that reason, the measuring channels k9…k12 cannot be used in combination with AC/DC sensitive measuring current transformers or as digital inputs.

Standards

The LINETRAXX® RCMS460/490 series complies with the requirements of the device standards:

- DIN EN 62020 (VDE 0663):2005-11

Approvals

UL508 - Standard for Industrial Control Equipment CSA C22.2 No. 14-13 - Industrial Control Equipment
UL File number E173157 (for all RCMS460/RCMS490)

UL1053 - Standard for Safety Ground-Fault Sensing and Relaying Equipment
UL File number E478610
(Only for B94053006 and solely in combination with Marina Guard MG-1.3 and MG-T.3. If necessary, other applications are to be evaluated separately after consulting the manufacturer.)

Overview of device types

Distinctive device features			RCMS460-D…	RCMS460-L	RCMS490 -D…	RCMS490-L…
	Parameter setting function		✓	–	✓	–
	Master/Slave		✓	✓	✓	✓
	Address range		1…90	1…90	1…90	1…90
Measuring circuit	Measuring channels per device		12	12	12	12
	CTAC…, CTUB100, CTBS25, WR…S(P), WS…, W…F series measuring current transformers		✓	✓	✓	✓
	CT monitoring		✓	✓	✓	✓
	Rated residual operating current $I_{\Delta n2}$ (Alarm)	AC/DC sensitive 0…2000 Hz (Type B)	10 mA…10 A	10 mA…10 A	10 mA…10 A	10 mA…10 A
		pulsed DC sensitive 42…2000 Hz (Type A)	6 mA…20 A	6 mA…20 A	6 mA…20 A	6 mA…20 A
		pulsed DC sensitive 42…2000 Hz (Type A) for the channels 9…12 (RCMS4x0-D4/-L4)	100 mA…125 A	100 mA…125 A	100 mA…125 A	100 mA…125 A
	Rated residual operating current $I_{\Delta n1}$ (prewarning)		10…100 %, min. 5 mA	10…100 %, min. 5 mA	10…100 %, min. 5 mA	10…100 %, min. 5 mA
	Function selectable per channel off, <, >, I/O		✓	✓	✓	✓
	Cut-off frequency adjustable for personnel, plant and fire protection		✓	*	✓	*
	Preset function for $I_{\Delta n2}$ and I/O		✓	✓	✓	✓
	Hysteresis		2…40 %	2…40 %	2…40 %	2…40 %
	Factor for additional CT		✓	✓	✓	✓
Switching elements	Common alarm relay for all channels		2 x 1 changeover contact	2 x 1 changeover contact	2 x 1 changeover contact	2 x 1 changeover contact
	Alarm relay per channel		–	–	12 x 1 N/O contact	12 x 1 N/O contact
Time response	Start-up delay 0…99 s		✓	✓	✓	✓
	Response delay tv, adjustable 0…999 s		✓	✓	✓	✓
	Operating time at	$I_{\Delta n}$ = 1 x $I_{\Delta n2}$: ≤ 180 ms	✓	✓	✓	✓
		$I_{\Delta n}$ = 5 x $I_{\Delta n2}$: ≤ 30ms	✓	✓	✓	✓
Displays, memory	Analysis of the harmonics (IΔ, DC, THF)		✓	*	✓	*
	History memory 300 data records		✓	–	✓	––
	Data logger for 300 data records/ channel		✓	–	✓	–
	Internal clock		✓	–	✓	–
	Password		✓	–	✓	–
	Language English, German, French, Swedish		✓	–	✓	–
	Backlit graphics LC display		✓	–	✓	–
	7-segment display and LED line		–	✓	–	✓

* only in conjunction with RCMS4xx-D, MK2430 or COM465IP

The following table gives an overview of the measuring functions per channel:

Overview of measuring functions					
Type			RCMS460-D/-L, RCMS490-D/-L	RCMS460-D4/-L4, RCMS490-D4/-L4	
Measuring functions, selectable			Channel 1…12	Channel 1…8	Channel 9…12
$I/I_{\Delta n}$	6 mA…20 A	(42 …2000 Hz)	</>/OFF	</>/OFF	--
$I/I_{\Delta n}$	100 mA…125 A	(42 …2000 Hz)	--	--	</>/OFF
$I/I_{\Delta n}$	10 mA…10 A	(0 …2000 Hz)	</>/OFF	</>/OFF	--
I/O			I/O/OFF	I/O/OFF	--

Operating and display elements

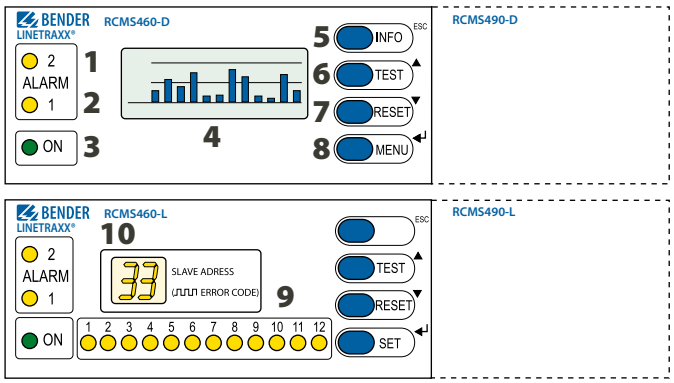

1 - LED ALARM "2" lights up when the measured value falls below or exceeds the response value in a measuring channel or an error is indicated by the digital input.

2 - LED "ALARM 1" lights up if the measured value exceeds or falls below the "Prewarning" response value in a channel or in the event of device error.

3 - Power On LED "ON" lights up when the device is switched on or flashes until the device is ready for operation during switching on.

4 - Illuminated graphic LCD

5 - "INFO" button: to query standard information (does not apply to RCMS4…-L)

ESC button: to exit the menu function without changing parameters

6 - Test button "TEST": to call up the self test
Arrow up button: Parameter changes, scroll

7 - Reset button "RESET": to delete alarm and fault messages
Arrow down button: Parameter changes, scroll

8 - "MENU" button: RCMS460-D/490-D: to toggle between the standard display, menu and alarm display

"SET" button: RCMS460-L/490-L: to set the BMS address

Enter button: to confirm parameter changes

9 - Alarm LEDs "1…12" light up when a fault has been detected in the relevant measuring channel or flash if there is a fault with the measuring current transformer

10 - Digital display for device address and error codes.

Frequency settings

The frequency response of the equipment can be set to a linear frequency response (up to the maximum frequency of Hz) if used for fire protection or to a frequency response in accordance with IEC 60990 for personnel protection. For plant protection, the residual current is measured up to the rated system frequency. The figure below shows the corresponding frequency response.

Frequency curves

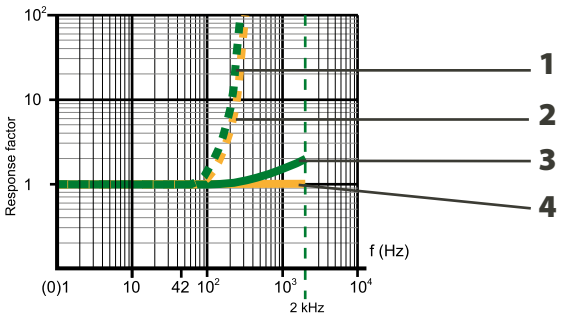

Response factor = $I_{\Delta}/I_{\Delta n}$

(I_{Δ}) Residual operating current: Measured value at which the RCMS responds.

($I_{\Delta n}$) Rated residual operating current:
Set response value

1 - Menu option "50 Hz" – plant protection: Only evaluates the fundamental component of the residual current.

2 - Menu selection "60 Hz"– Plant protection: Only evaluates the fundamental component of the residual current.

3 - Menu selection "IEC"– Touch current for let go (protection of persons) in accordance with IEC 60990

4 - Menu selection "None"– Fire protection: Response factor remains the same over the entire frequency range.

Wiring diagram RCMS460-D…/-L…

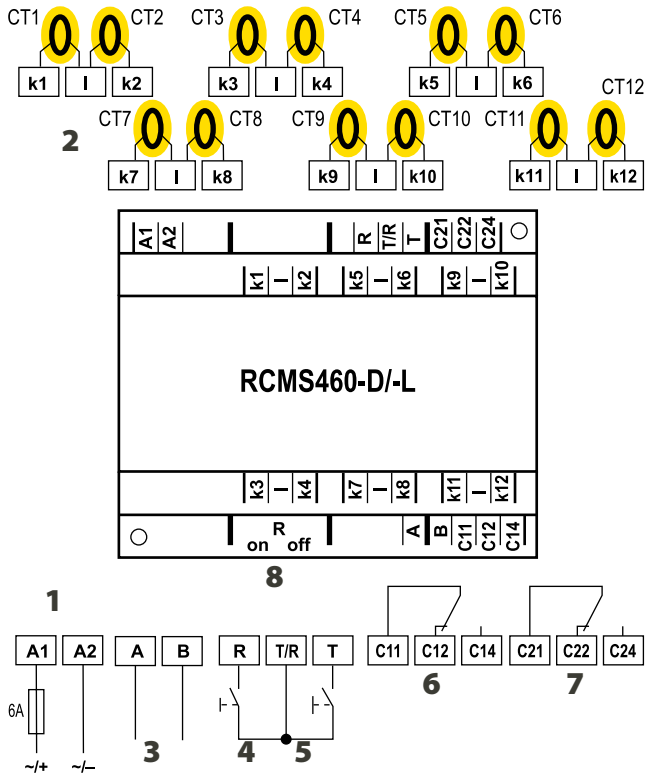

Wiring diagram RCMS490-D…/-L…

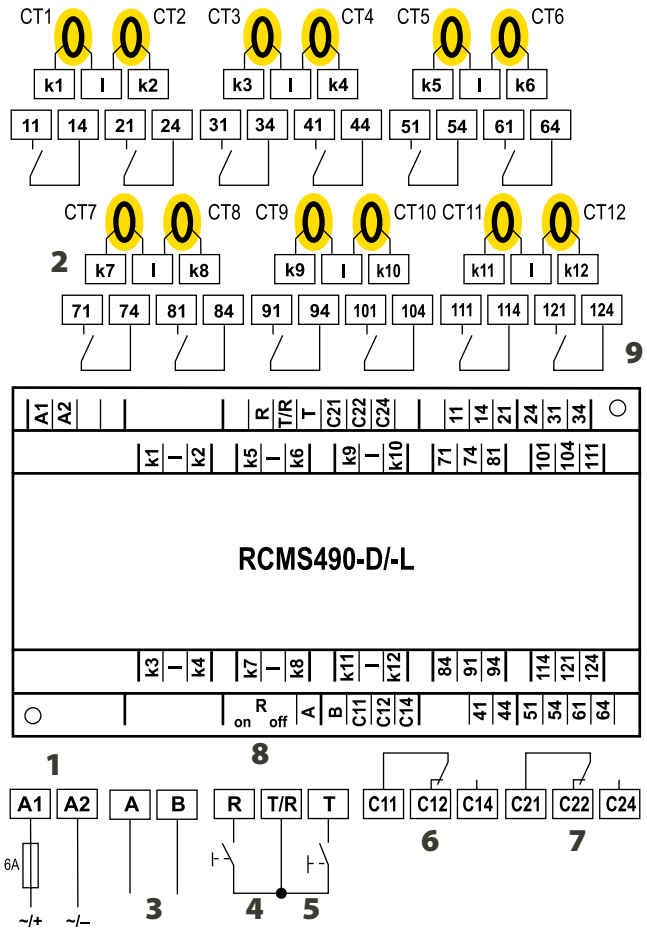

1 - **A1, A2** Connection of supply voltage U_s (see ordering information): we recommend the use of 6 A fuses.

2 - **k1, I… k12, I** Connection of measuring current transformers CT1…CT12. Either Type A or Type B measuring current transformers can be selected for each measuring channel. Six CTUB100 series measuring current transformers require one STEP-PS power supply unit. The channels k9…k12 of the device versions RCMS460-D4/-L4 require the connection of Type A measuring current transformers.

3 - **A, B** BMS bus (RS-485 interface with BMS protocol)

4 - **R, T/R** External reset button (N/O contact). The external reset buttons of several devices must not be connected to one another.

5 - **T, T/R** External test button (N/O contact). The external test buttons of several devices must not be connected to one another.

6 - **C11, C12, C14** Common alarm relay K1: Alarm 1, common message for alarm, prewarning, device error.

7 - **C21, C22, C24** Common alarm relay K2: ALARM 2, common message for alarm, prewarning, device error.

8 - **$R_{on/off}$** Activate or deactivate the terminating resistor of the BMS bus (120 Ω).

9 - **CT** Measuring current transformers (CTAC…, CTBS25, CTUB100, WR…, WS…, WF… series)

Wiring diagram– Digital input

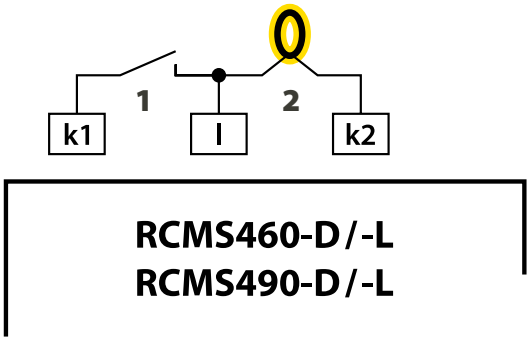

1 - Potential-free contact
0 ≙ Resistance between k and I > 250 Ω
I ≙ Resistance between k and I < 100 Ω

2 - Measuring current transformers

Connection CTAC..., WR..., WS... series measuring current transformers (pulsed current sensitive)

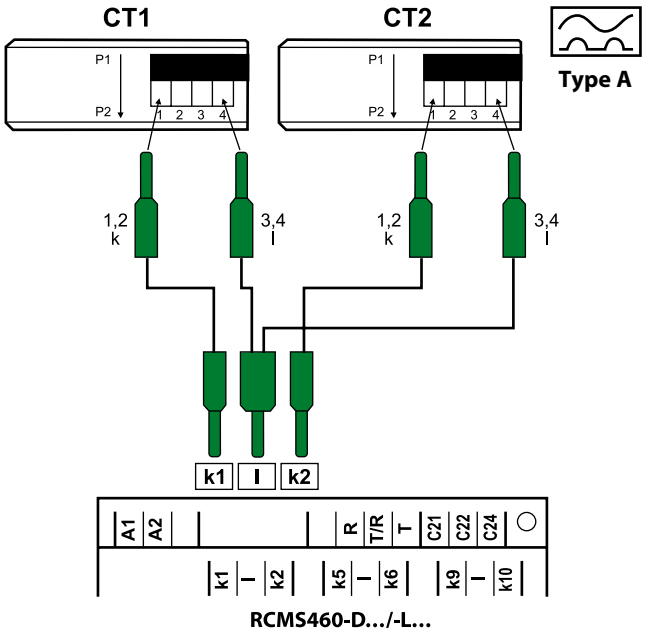

Connection CTUB100 series measuring current transformer (AC/DC current sensitive)

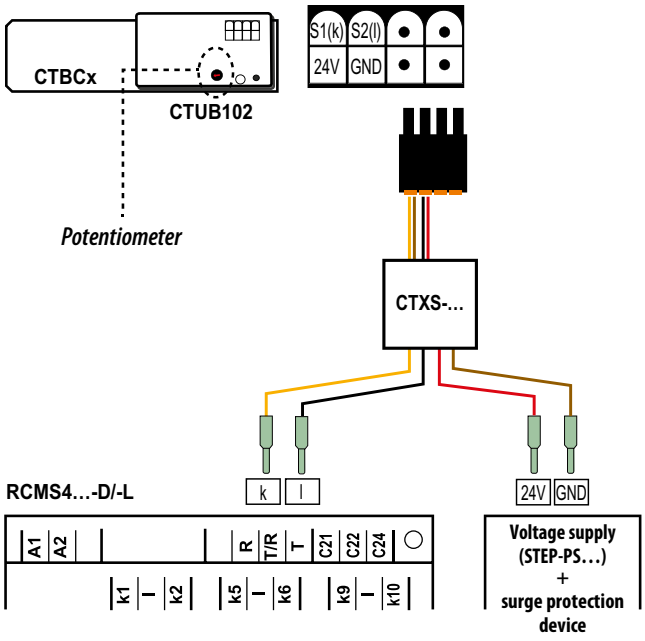

Connection WF... series measuring current transformers

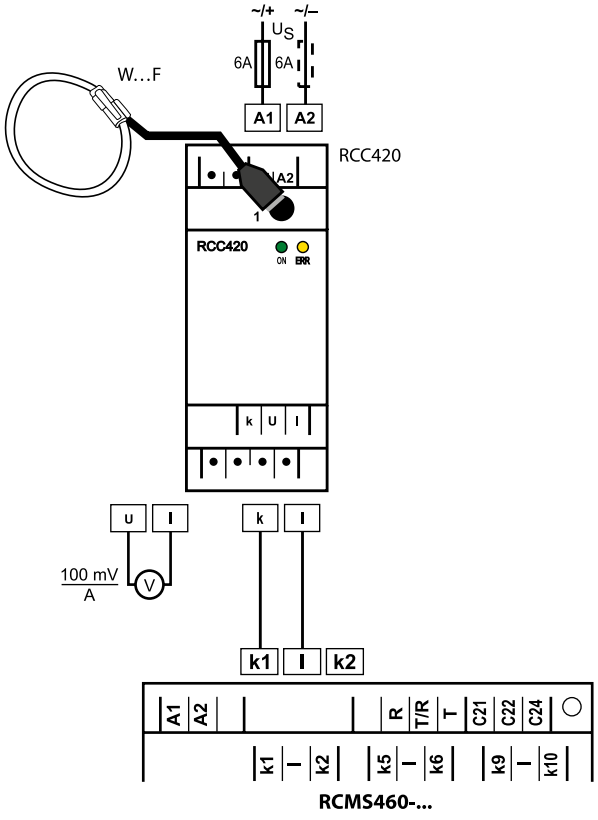

Anschluss Messstromwandler Serie CTBS25 (allstromsensitiv)

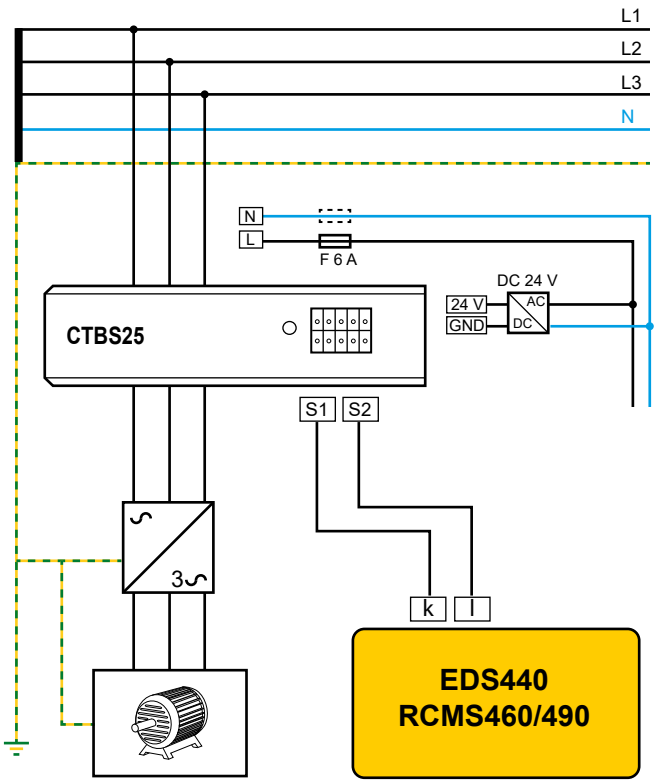

i *The connections k and l at the residual current monitor must not be interchanged.*

Example for a design of a – minimum system consisting of an RCMS460-D and 12 measuring points

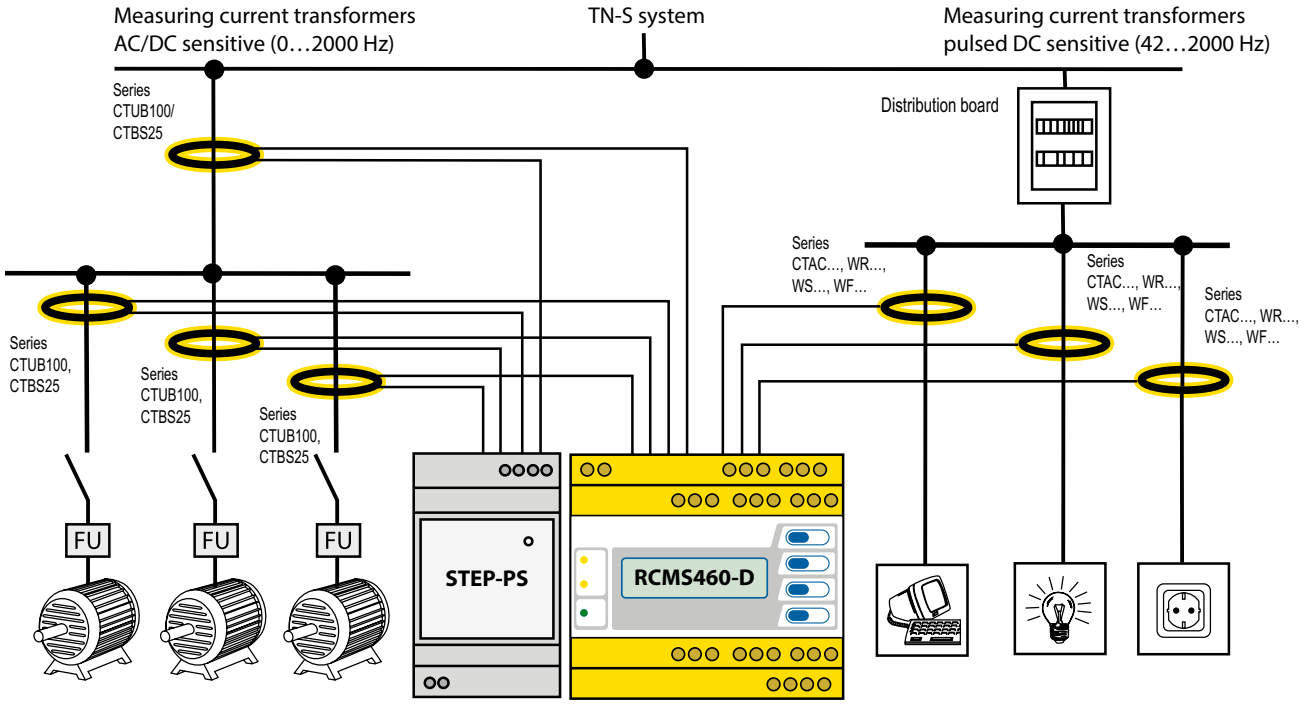

Example for a system design of – standard system consisting of an RCMS460-D and RCMS460-L and a protocol converter COM465IP

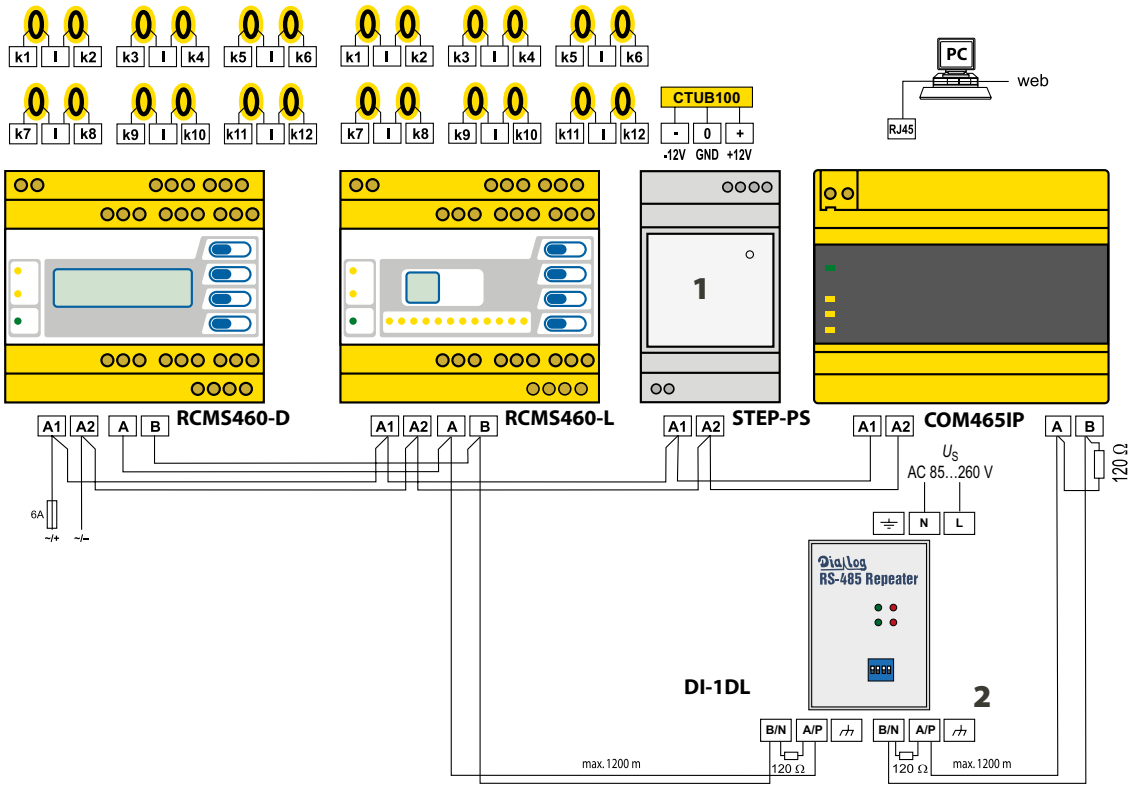

Note:

1 - When usingAC/DC current sensitive measuring current transformers of the CTUB100 and CTBS25 series , a DC 24 V power supply unit (e.g. STEP-PS series) is required to supply the measuring current transformers with voltage. For this purpose, the technical data of the respective measuring current transformer series must be observed.

2 - The DI-1DL repeater only is required when the length of the cable exceeds 1200 m.

Technical data

Insulation coordination acc. to IEC 60664-1/IEC 60664-3 for the versions:

a) RCMS4x0-D1

Supply voltage U_s	DC 24…75 V/AC 24…60 V (AC/DC ±20 %)
Supply voltage frequency	DC, 50/60 Hz
Rated insulation voltage	**100 V**
Rated impulse voltage/pollution degree	2.5 kV/3
Overvoltage category	III
Protective separation (reinforced insulation) between	(A1, A2) - (k1, l…k12, R, T/R, T, A, B)
Voltage test acc. to IEC 61010-1	1.344 kV
Rated insulation voltage	**250 V**
Rated impulse voltage/pollution degree	4 kV/3
Overvoltage category	III
Basic insulation between	(A1, A2), (k1, l…k12, R, T/R, T, A, B) - (C11, C12, C14), (C21, C22, C24), (11,14), (21,24), (31,34), (41,44), (51,54), (61,64), (71,74), (81,84), (91,94),(101,104), (111,114), (121,124)
Basic insulation between:	(11, 14) - (21, 24) - (31, 34) - (41, 44) - (51, 54) - (61, 64)
Voltage test acc. to IEC 61010-1	2.21 kV
Rated insulation voltage	**250 V**
Rated impulse voltage/pollution degree	6 kV/3
Overvoltage category	III
Protective separation (reinforced insulation) between	(C11, C12, C14) - (C21, C22, C24) - (11, 14, 21, 24, 31, 34) - (41, 44, 51, 54, 61, 64) - (71,74) - (81,84) - (91,94) - (101,104) - (111,114) - (121,124)
Voltage test acc. to IEC 61010-1	3.536 kV

b) RCMS4x0-D2

Supply voltage U_s	AC/DC 100…240 V (-20…+15 %)
Supply voltage frequency	DC, 50/60 Hz
Rated insulation voltage	**250 V**
Rated impulse voltage/pollution degree	6 kV/3
Overvoltage category	III
Protective separation (reinforced insulation) between	(A1, A2) - (k1, l…k12, R, T/R, T, A, B), (C11, C12, C14), (C21, C22, C24), (11,14), (21,24), (31,34), (41,44), (51,54), (61,64), (71,74), (81,84), (91,94),(101,104), (111,114), (121,124)
Protective separation (reinforced insulation) between	(C11, C12, C14) - (C21, C22, C24) - (11, 14, 21, 24, 31, 34) - (41, 44, 51, 54, 61, 64) - (71,74) - (81,84) - (91,94) - (101,104) - (111,114) - (121,124)
Voltage test acc. to IEC 61010-1	3.536 kV
Rated insulation voltage	**250 V**
Rated impulse voltage/pollution degree	4 kV/3
Overvoltage category	III
Basic insulation between:	k1, l…k12, R, T/R, T, A, B) - (C11, C12, C14), (C21, C22, C24)
Basic insulation between:	(11, 14) - (21, 24) - (31, 34) - (41, 44) - (51, 54) - (61, 64)
Voltage test acc. to IEC 61010-1	2.21 kV

Measuring circuit

External measuring current transformers	CTAC…, WR…, WS…, WF… series (Type A), CTUB100, CTBS25 series (Type B)
CT monitoring	on/off (on)*
Rated burden RCMS…-D/-L	68 Ω
Rated burden RCMS…-D4/-L4 (channels 9…12 only)	1 Ω
Rated insulation voltage (measuring current transformer)	800 V
Operating characteristics acc. to IEC/TR 60755	type A and type B depending on measuring current transformer series (type A)*
Rated frequency	0…2000 Hz (Type B) / 42…2000 Hz (type A)
Cut-off frequency	none, IEC, 50 Hz, 60 Hz (none)*
Measuring range RCMS…-D/-L	0…30 A (measuring current transformer type A) 0…20 A (measuring current transformer type B) Crest factor up to 10 A = 4, up to 20 A = 2
Measuring range RCMS…-D4/-L4 (channels 9…12 only)	100 mA…125 A
Rated residual operating current IΔn2 (alarm)	10 mA…10 A (type B) 6 mA…20 A (type A) (100 mA overcurrent)*
Rated residual operating current $I_{\Delta n2}$ (alarm) for RCMS…-D4/-L4 (channels 9…12 only)	100 mA…125 A (16 A overcurrent)*
Rated residual operating current $I_{\Delta n1}$ (prewarning)	10…100 % x $I_{\Delta n2}$ min. 5 mA (50 %)*
Digital input	1: < 100 Ω 0: > 250 Ω
Preset for alarm	I_Δ x factor 1…99 (3)* Offset 0…20 A (30 mA)*
Preset for digital input	0/1 (1)*
Relative uncertainty RCMS…-D/-L	0…-20 %**
Relative uncertainty RCMS…-D4/-L4 (channels 9…12 only)	+10…-20 %**
Hysteresis	2…40% (20 %)*
Factor for additional CT	/1…10; x 1…250 (x 1)*
Number of measuring channels (per device/system)	12/1080

Time response

Start-up delay t (start-up) per device	0…99 s (0 ms)*
Response delay t_{on} per channel	0…999 s (200 ms)*
Delay on release t_{off} per channel	0…999 s (200 ms)*
Operating time t_{ae} at $I_{\Delta n} = 1$ x $I_{\Delta n1/2}$	≤ 180 ms
Operating time t_{ae} at $I_{\Delta n} = 5$ x $I_{\Delta n1/2}$	≤ 30 ms
Response time t_{an} for residual current measurement	$t_{an} = t_{ae} + t_{on1/2}$
Operating time t_{ae} digital inputs	≤ 3.5 s
Scanning time for all measuring channels (residual current measurement)	≤ 180 ms
Recovery time t_b	500…600 ms

Displays, memory

Measured value display range RCMS…-D / -L	0…30 A (CT Type A) 0…20 A (CT type B)
Display range, measured value RCMS…-D4/-L4 (channels 9…12)	0…125 A (CT type A)
Error of indication	± 10 %
LEDs	ON/ALARM (RCMS…-D…) ON/ALARM / measuring channel 1…12 (RCMS…-L…)
LC display	backlit graphical display (RCMS…-D…)
7-segment display	2 x 7.62 mm (RCMS4…-L)
History memory	300 data records (RCMS…-D…)
Data logger	300 data records per measuring channel (RCMS…-D…)
Password	off / 0…999 (off)*
Language	
German, English, French	D256 V2.3x
German, English, Swedish	D339 V2.3x
German, English, Italian	D403 V2.3x
Fault memory alarm relay	on/off (off)*

Inputs/outputs

Test/reset button	internal/external
Cable length for external test/reset button	0…10 m

Interface

Interface/protocol	RS-485/BMS
Baud rate	9.6 kbit/s
Cable length	0…1200 m
Cable (shielded, shield connected to PE on one side)	recommended: min. J-Y(St)Y min. 2x0.8
Terminating resistor	120 Ω (0.25 W) connectable via DIP switch
Device address, BMS bus	1…90 (2)*

Cable lengths for CTAC…, WR…, WS…, WF… series measuring current transformers

Single wire ≥ 0.75 mm²	0…1 m
Single wire, twisted ≥ 0.75 mm²	0…10 m
Shielded cable ≥ 0.5 mm²	0…40 m
Cable (shielded, shield connected to terminal l at one end, must not be earthed)	recommended: J-Y(St)Y min. 2 x 0.8

Cable lengths for CTUB100 and CTBS25 series measuring current transformers

Single wire ≥ 0.75 mm²	0…10 m
Connection	plug-in connector, recommended CTXS…

Switching elements

Number	2 x 1 changeover contact (RCMS460) 2 x 1 changeover contact, 12 x 1 N/O contact (RCMS490)
Operating principle	NC or N/O operation (N/O operation)*
Electrical endurance under rated operating conditions, number of cycles	10.000

Contact data acc. to IEC 60947-5-1

Utilisation category	AC-13	AC-14	DC-1	DC-12	DC-12
Rated operational voltage	230 V	230 V	24 V	110 V	220 V
Rated operational current (common alarm relay)	5 A	3 A	1 A	0.2 A	0.1 A
Rated operational current (alarm relay)	2 A	0.5 A	5 A	0.2 A	0.1 A
Minimum contact rating					10 mA/5 V DC

Environment/EMC

EMC	DIN EN 62020
Operating temperature	-25…+ 55 °C

Classification of climatic conditions acc. to IEC 60721

(related to temperature and relative humidity)

Stationary use (IEC 60721-3-3	3K22
Transport (IEC 60721-3-2)	2K11
Long-term storage (IEC 60721-3-1)	1K22

Classification of mechanical conditions acc. to IEC 60721

Stationary use (IEC 60721-3-3)	3M11
Transport (IEC 60721-3-2)	2M4
Long-term storage (IEC 60721-3-1)	1M12

Connection

For UL applications:

Use copper wire only!

Use 60/70 °C copper conductors only!

Connection	screw terminals
Connection properties:	
Rigid/flexible/conductor sizes	0.2…4/0.2…2.5 mm²/AWG 24…12
Multi-conductor connection (2 conductors with the same cross section):	
Rigid/flexible	0.2…1.5/0.2…1.5 mm2
Stripping length	8…9 mm
Tightening torque	0.5…0.6 Nm

Other

Operating mode	continuous operation
Mounting	display-oriented
Degree of protection, internal components (IEC 60529)	IP30
Degree of protection, terminals (IEC 60529)	IP20
Enclosure material	polycarbonate
Flammability class	UL94V-0
Screw mounting	2 x M4
DIN rail mounting acc. to	IEC 60715
Software version measurement technique	D233 V2.60
Software version display	
RCMS4…-L	D216 V2.3x
German, English, French	D256 V2.3x
German, English, Swedish	D339 V2.3x
German, English, Italian	D403 V2.3x
Power consumption	≤10 VA (RCMS460) ≤12 VA (RCMS490)
Documentation number	D00067
Weight	≤ 300 g (RCMS460), ≤ 510 g (RCMS490)

( )* factory setting

** In the frequency range of < 15 Hz, the relative uncertainty is between -35 % and 100 %.

Dimension diagrams

Dimensions in mm

RCMS460-D/-L

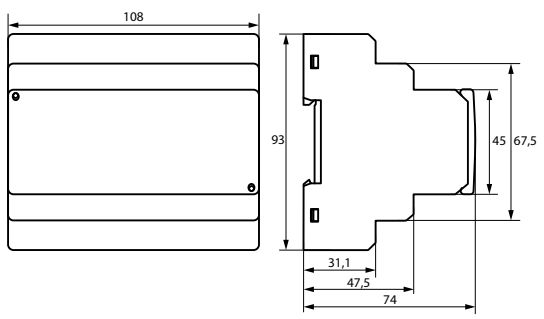

RCMS490-D/-L

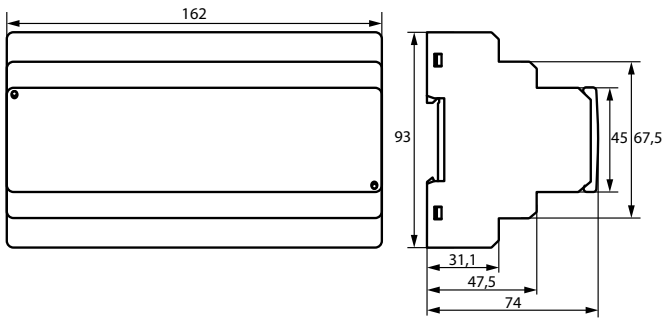

Ordering information RCMS460/490-D

Type	Supply voltage U_s	Differential measurement method		Common alarm relay for all channels	Alarm relay per channel	4 channels for load current measurement	Art. No.
		pulsed DC sensitive	AC/DC sensitive				
RCMS460-D-1	AC 16…72 V, 50/60 Hz / DC 16…94 V	6 mA…20 A	10 mA…10 A	2 x 1 changeover contact	–	–	B94053001
RCMS460-D-2	AC 70…276 V, 50/60 Hz / DC 70…276 V						B94053002
RCMS460-D4-1	AC 16…72 V, 50/60 Hz / DC 16…94 V					100 mA…125 A	B94053009
RCMS460-D4-2	AC 70…276 V, 50/60 Hz / DC 70…276 V						B94053010
RCMS490-D-1	AC 16…72 V, 50/60 Hz / DC 16…94 V				12 x 1 N/O contact	–	B94053005
RCMS490-D-2	AC 70…276 V, 50/60 Hz / DC 70…276 V						B94053006
RCMS490-D4-1	AC 16…72 V, 50/60 Hz / DC 16…94 V					100 mA…125 A	B94053011
RCMS490-D4-2	AC 70…276 V, 50/60 Hz / DC 70…276 V						B94053012

Ordering information RCMS460/490-L

Type	Supply voltage U_s	Current measurement		Common alarm relay for all channels	Alarm relay per channel	Art. No.
		pulsed DC sensitive	AC/DC sensitive			
RCMS460-L-1	AC 16…72 V, 50/60 Hz / DC 16…94 V	6 mA…20 A	10 mA…10 A	2 x 1 changeover contact	–	B94053003
RCMS460-L-2	AC 70…276 V, 50/60 Hz / DC 70…276 V					B94053004
RCMS490-L-1	AC 16…72 V, 50/60 Hz / DC 16…94 V				12 x 1 N/O contact	B94053007
RCMS490-L-2	AC 70…276 V, 50/60 Hz / DC 70…276 V					B94053008

Accessories

Description	Art. No.
XM460 mounting frame, 144 x 82 mm	B990995

Suitable system components

Description	Version	Type	Art. No.
Power supply unit	for supplying up to 4 CTUB100 series measuring current transformers	STEP-PS/1 AC/24 DC/0.5	B94053110
	for supplying up to 14 CTUB100 series measuring current transformers	STEP-PS/1 AC/24 DC/1.75	B94053111
	for supplying up to 34 CTUB100 series measuring current transformers	STEP-PS/1 AC/24 DC/4.2	B94053112
	RS-485 repeater	DI-1PSM	B95012044
Condition Monitor	Condition Monitor with integrated gateway: Bender system/Ethernet AC/DC 24…240 V, DC, 50…60 Hz	COM465IP	B95061065
	Individual text messages for all devices/channels, device failure monitoring, email in the event of an alarm	COM465IP Function package A	B75061011
	Modbus TCP server for max. 98 * 139 BMS nodes as well as BCOM and universal measuring devices, SNMP server	COM465IP Function package B	B75061012
	Parameter setting of BMS devices as well as BCOM and universal measuring devices	COM465IP Function package C	B75061013
	Visualisation of Bender systems, System visualisation	COM465IP Function package D	B75061014
	Virtual devices	COM465IP Function package E	B75061015
	Integration of third-party devices	COM465IP Function package F	B75061016
	Condition Monitor for the connection of Bender BMS devices and universal measuring devices to TCP/IP networks	CP907-I	B95061031
			B95061031
		CP915-I	B95061033
			B95061034
Alarm indicator and test combination	Alarm indicator and test combination in accordance with IEC 60364-7-710, with BMS bus and USB interface, 12 digital inputs, one relay output, alarm texts programmable via interfaces and personal computer, standard text display. Version: Flush-mounting enclosure	MK2430-11	B95100001
	Alarm indicator and test combination in accordance with IEC 60364-7-710, with BMS bus and USB interface, alarm texts programmable via interfaces and personal computer, standard text display. Version: Flush-mounting enclosure	MK2430-12	B95100002

[1] Absolute values

Measuring current transformers

Pulsating current sensitive measuring current transformers for RCMS460/490

Type of construction	Internal diameter/mm	Type	Art. No.
circular	20	CTAC20	B98110005
	35	CTAC35	B98110007
	60	CTAC60	B98110017
	120	CTAC120	B98110019
	210	CTAC210	B98110020
rectangular	70 x 175	WR70x175S	B911738
		WR70x175SP	B911790
	115 x 305	WR115x305S	B911739
		WR115x305SP	B911791
	150 x 350	WR150x350S	B911740
		WR150x350SP	B911792
	200 x 600	WR200x500S	B911763
		WR200x500SP	B911793
split-core	20 x 30	WS20x30	B98080601
	50 x 80	WS50x80	B98080603
	80 x 120	WS80x120	B98080606

Other measuring current transformer types on request.

Flexible measuring current transformers (pulsed DC sensitive) for RCMS460/490

Internal diameter/mm	Type	Art. No.
170	WF170-1	B78080201
	WF170-2	B78080202
250	WF250-1	B78080203
	WF250-2	B78080204
500	WF500-1	B78080205
	WF500-2	B78080206
800	WF800-1	B78080207
	WF800-2	B78080208
1200	WF1200-1	B78080209
	WF1200-2	B78080210
1800	WF1800-1	B78080221
	WF1800-2	B78080222

WF… series measuring current transformers consist of one flexible WF… series measuring current transformer and one RCC420 signal converter.

AC/DC sensitive measuring current transformers for RCMS460/490

Internal diameter/mm	Type	Art. No.
ø 20	CTUB102-CTBC20	B78120011
	CTUB102-CTBC20P	B78120021
ø 25, split-core	CTBS25	B98120060
ø 35	CTUB102-CTBC35	B78120013
	CTUB102-CTBC35P	B78120023
ø 60	CTUB102-CTBC60	B78120015
	CTUB102-CTBC60P	B78120025
ø 120	CTUB102-CTBC120	B78120017
	CTUB102-CTBC120P	B78120027
ø 210	CTUB102-CTBC210	B78120019
	CTUB102-CTBC210P	B78120029

Connection cable for CTUB… series measuring current transformers

Length/m	Type	Art. No.
1	CTXS-100	B98110090
2,5	CTXS-250	B98110091
5	CTXS-500	B98110092
10	CTXS-1000	B98110093

Bender GmbH & Co. KG

Londorfer Straße 65
35305 Grünberg
Germany

Tel.: +49 6401 807-0
info@bender.de
www.bender.de

© Bender GmbH & Co. KG, Germany
Subject to change!
The specified standards take into account the edition valid until 07.2023 unless otherwise indicated.