Littelfuse® | Carling Technologies®
A Littelfuse® Brand

# UKP-Series

J1939 Universal Keypads

**PRODUCT WEBPAGE**

*request sample, configure part, watch video*

The UKP-Series is a universal, customizable membrane keypad that is compliant with SAE J1939 CAN standards. With above and below sealing protection, the UKP-series can be installed inside or outside the cab. Each button features laser etched legends, up to three dimmable LED function lights, and tactile/audible feedback when pressed.

**12/24** VDC

**1,000,000** Operations

**IP67 Sealing** for above panel components

## Typical Applications

- Truck
- Bus
- Construction
- Mining
- Agricultural

www.carlingtech.com 860.793.9281 sales@carlingtech.com

# Design Features

**LOW PROFILE DESIGN**
0.62 inch [15.92 mm] thickness (see dimensional specs for more detail)

Front View

**SEALING PROTECTION**
IP67 above panel and below panel (when connected)

**LED FUNCTION LIGHTS**
One, two, or three LED Function Lights per button.

**CUSTOMIZABLE ICONS**
Choose from our standard library of icons or use custom icons

Back View

**CONNECTOR**
Mates to the Deutsch DT-Series Connector

**MOUNTING STUDS OR WINGS**
M5 x 0.8mm Mounting Studs (2x3, 2x4, 2x5, 2x6)
Mounting Wings (2x2)

# Related Products

**CLTM12-S-Series >**
Load Controller

**CKJ-Series >**
Jog Switch

**VM-Series >**
Operator Control Module

# Tech Specs

## General

| | |
|---|---|
| CAN Protocol | CAN 2.0b type interface as defined by SAE J1939 |
| Illumination | LED backlit icons and function lights. Up to 3 function lights per button. Dimmable illumination, controlled by CAN messages |
| Connection/Wiring | Deutsch DT-Series 4 Pin connector |
| Operating Force | 7 ± 3 N |
| Mounting | Clips or studs (See Dimensional Specs), Vertically or horizontally |
| Panel Cutout/Dimensions | See Dimensional Specs |

## Electrical

| | |
|---|---|
| Operating Voltage | Designed for 12/24 Volt systems Minimum 8VDC Maximum 32VDC |
| Sleep Mode | Defined as the state after a pre-defined time of non-activity to reduce current draw on the system, and wakes on keypress or CAN message |
| ESD | ISO 10605, ±15kV air discharge (x2), ±8kV contact discharge (x2) |
| Radiated Immunity-ALSE | ISO 11452-2, Absorbed-lined chamber enclosure field strength 100V/m, frequency from 80MHz to 2GHz, Class A |
| Bulk Current Injection | ISO 11452-4, Level 100mA, frequency from 1MHz to 400MHz, linear step, Class A |
| Conducted Transients | ISO 7637-2, All test pulses in Annex A Table A1 and A2, 2a/3a/3b/5a/5b-Class A |
| Radiation Emission | ISO 13766-1, Broadband and Narrowband for ESA, range 30~1000MHz |
| Over Voltage | ISO 16750-2, Power up with 36VDC for 60 min at 65 °C. |
| Short Circuit Protection | ISO 16750-2, All output terminal short to ground for 60s. |
| Reverse Polarity Protection | ISO 16750-2, 28V for 60s |
| Starting Profile | ISO 16750-2, Level IV $Us_6$=6V (12V) class B. Level I $Us_6$=10V (24V) class A |
| Withstand Voltage | ISO 16750-2, Apply 500VAC 60Hz for 60s |
| Insulation Resistance | ISO 16750-2, 500VDC for 60s, > 100MΩ |
| Superimposed Alternating Voltage | ISO 16750-2, UPP of 4 V for 120s, total 5 cycles |
| Slow Decrease and Increase of Supply Voltage | ISO 16750-2, Increase the supply voltage from 0V to Usmin, then decrease it from Usmin to 0V, applying a change rate of 0.5 V/min linear. |
| Momentary Drop in Supply Voltage | ISO 16750-2, Voltage drop from 8V to 4.5V, duration≤ 100 ms. |
| EU Commission Directive | 2004/104/EC Compliant (E-Marked) |

## Environmental

| | |
|---|---|
| Operating Temperature | -40°C to +85°C |
| Storage Temperature | -40°C to +85°C |
| Thermal | -40°C to +85°C<br>IEC 60068-2-1: Cold Soak<br>IEC 60068-2-2: Heat Soak<br>IEC 60068-2-14: Cycling/Shock |
| Solar Radiation | IEC 60068-2-5, procedure B, Irradiation: 1120w/m², Total Period: 15 day. Light: 20h, 70°C BST, 30%RH, 40°C CHT. Dark: 4h, 25°C BST, 93%RH, 25°C CHT |
| Low Pressure | IEC 60068-2-13 |
| Humidity | Soak: IEC 60068-2-78, Soak at 40°C at 93% RH for 10 days<br>Cyclic: IEC 60068-2-30, Method 1, Temp range from 25°C to 55°C, cycling change with 93±3% RH, 10 cycles for 240 hrs. |
| Ingress Protection | ISO 20653, IP67, for above panel components of actual switch only. |
| Salt Spray | IEC 60068-2-52, Salt mist for 2h at 35°C, dry for 4h at 35°C RH≤30%, and humid for 2h at 50°C RH≥95%. Repeat 12 cycles, total 96h. |
| Chemical Loads | ISO 16750-5, brushing engine oil, hydraulic oil, diesel fuel, Grease, Urea at 85°C for 22hrs. Dipping battery fluid for 22hrs and alcohol for 10min at 25°C. |
| Resistance for Rubbing | RCA Abrasion, 400 sweeps, 175g |

## Mechanical

| | |
|---|---|
| Endurance | 1,000,000 cycles per key (20% at -40°C, 20% at +85°C, 60% at +25°C) |
| Vibration | Resonance Vibration: IEC 60068-2-6, 20Hz~500Hz per axis with amplitude of 19.6m/s2. Apply 90m/s2 at resonance point for 1h at Z axis and 0.5h at X/Y axis.<br><br>Sinusoidal Vibration: IEC 60068-2-6, 5Hz~200Hz with amplitude 100m/s² for 4h at Z axis and 2h at X/Y axis.<br><br>Random vibration: IEC 60068-2-64, 10~2000Hz. Acceleration 5.825Grms, 8h per axial |
| Shock and Bump | IEC 60068-2-27, Shock 500 m/s² 11 milliseconds. IEC 60068-2-29, Bump 400 m/s² 6 milliseconds 600 cycles |
| Drop Test | IEC 60068-2-31, Free fall, Procedure 1, 1000 mm height, drop on all 3 axes in both directions |

**Tech Specs continued on next page**



GPS-0020 Rev: B

*Manufacturer reserves the right to change product specification without prior notice.

# Tech Specs

## Software Interface Integration

Click below to integrate the UKP-Series into J1939 CAN network:
**www.carlingtech.com/sites/default/files/documents/ukp-series_interface.pdf**

## Tables

**Table A:** Standard Illumination [1]

| Type | Red | Green | White |
|---|---|---|---|
| Backlight | --- | --- | Yes |
| Function | Yes | Yes | --- |

Note: 1. Additional colors are available. Consult factory.

**Connection:** 4 pin Deutsch DT Connector. Power with 8V to 32V vehicle type input

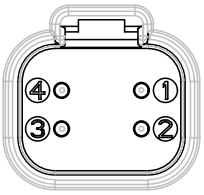


| No. | Destination |
|---|---|
| 1 | Power |
| 2 | Ground |
| 3 | CAN H |
| 4 | CAN L |

**Table B:** Operation Current Values

| Size | Voltage | Sleep Current Value (mA) |
|---|---|---|
| 2x2 | 12 | ~4.63 |
| | 24 | ~3.18 |
| 2x3 | 12 | ~6.67 |
| | 24 | ~4.27 |
| 2x4 | 12 | ~9.11 |
| | 24 | ~5.55 |
| 2x5 | 12 | ~8.84 |
| | 24 | ~5.40 |
| 2x6 | 12 | ~11.54 |
| | 24 | ~6.95 |


GPS-0020 Rev: A
*Manufacturer reserves the right to change product specification without prior notice.

# Ordering Scheme

## Part 1: Keypad

| Sample Part No. | UKP | 1 | - | 5 | 1 | - | A | C | - | A | - | J | 128 | / |
|---|---|---|---|---|---|---|---|---|---|---|---|---|---|---|
| Selection | | 1 | | 2 | 3 | | 4 | 5 | | 6 | | 7 | 8 | 9 |

### 1. SERIES

**UKP** UKP-Series Keypad

### 2. KEYPAD STYLING

**1** Standard

### 3. BUTTON LAYOUT

| | | | |
|---|---|---|---|
| **1** | Two by Two | **6** | Three by Two |
| **2** | Two by Three | **7** | Four by Two |
| **3** | Two by Four | **8** | Five by Two |
| **4** | Two by Five | **9** | Six by Two |
| **5** | Two by Six | | |

### 4. KEYPAD COLOR

**1** Black

### 5. BACKLIGHT

**A** White

### 6. FUNCTION LIGHT COLOR [1]

**C** Green **D** Red

### 7. NON-ILLUMINATED IMAGE COLOR

**A** White

### 8. NETWORK TYPE

**J** J1939 (250K Baud Rate)
**K** J1939 (500K Baud Rate)

### 9. SOURCE ADDRESS [2]

The Source Address is a unique number (**000-248**) assigned to each node on a CAN network, and is determined based upon the specific CAN architecture of each customer application.

Notes:
1 Additional illumination colors are available. Consult factory.
2 Default Source Address is 128.
Source Address to be defined as the Decimal Value in the Ordering Scheme, unit will be programmed with Source Address as a Hexadecimal value when delivered.

Configure Complete Part Number >

## Part 2: Icon Artwork (Select 12 buttons for 2x6, 10 buttons for 2x5, 8 buttons for 2x4, 6 buttons for 2x3, and 4 buttons for 2x2.)

| Button | Function | Icon Code |
|---|---|---|
| *Button 1* | 2 | RS |
| *Button 2* | 2 | RA |
| *Button 3* | 3 | UV |
| *Button 4* | 3 | UW |
| *Button 5* | 6 | MT |
| *Button 6* | 8 | UB |
| *Button 7* | 8 | NN |
| *Button 8* | 8 | PU |
| *Button 9* | 5 | PR |
| *Button 10* | 5 | PP |
| *Button 11* | 4 | RH |
| *Button 12* | 4 | NU |

### FUNCTION LIGHT CODE

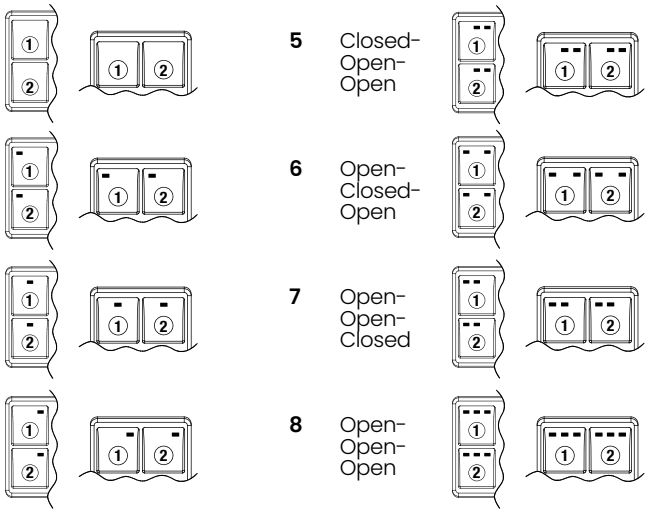

**1** No Function Light

**2** Open-Closed-Closed

**3** Closed-Open-Closed

**4** Closed-Closed-Open

**5** Closed-Open-Open

**6** Open-Closed-Open

**7** Open-Open-Closed

**8** Open-Open-Open

### ICON CODE

**00** For standard icons, see Standard Legends Code page.

For additional icons, please consult factory.

**ICON MARKING AREA SIZE**

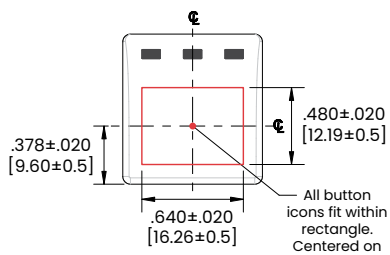




COS-0114 Rev: A

*Manufacturer reserves the right to change product specification without prior notice.

# Dimensional Specs

inches [millimeters]

## 2x2 and 2x3 Configurations

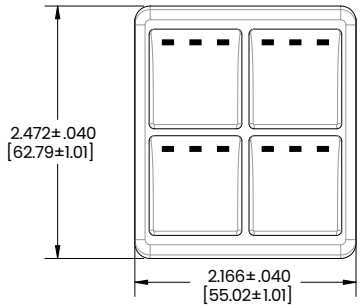


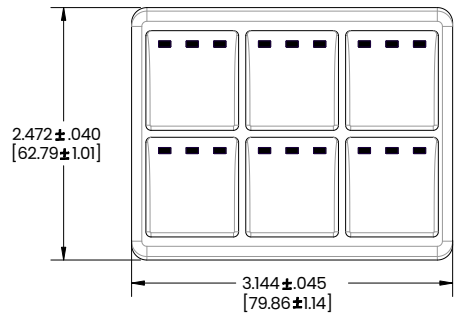


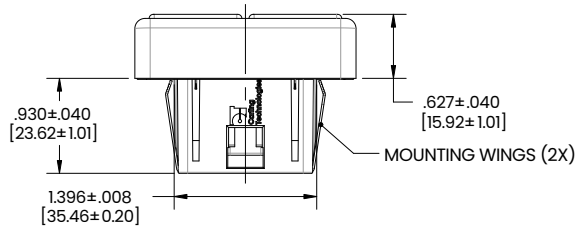


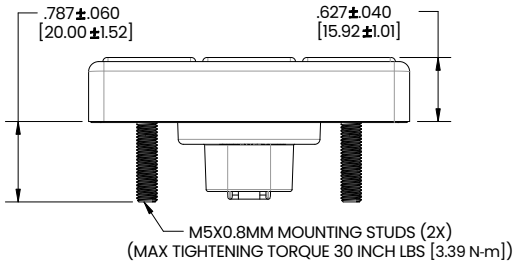


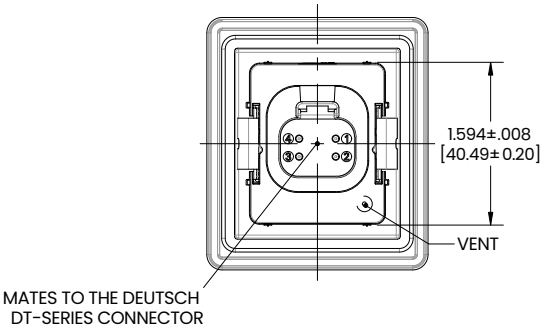


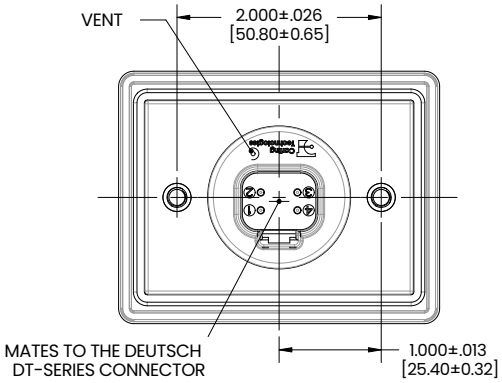


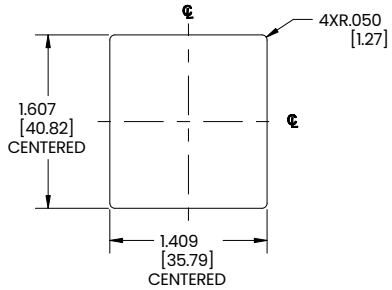


PANEL CUTOUT TOLERANCE ±.005 [0.13],
PANEL THICKNESS TO BE .080 [2.03] MIN AND .130 [3.30] MAX.

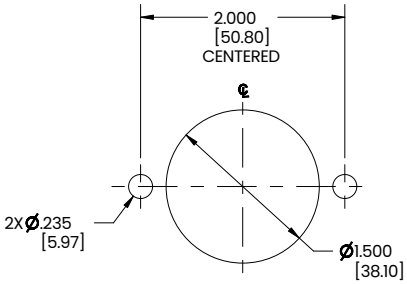


PANEL CUTOUT TOLERANCE ±.005[0.13],
PANEL THICKNESS TO BE .050[1.27] MIN AND .300[7.62] MAX.

Notes:
1. Do not puncture or plug the vent





*Manufacturer reserves the right to change product specification without prior notice.

# Dimensional Specs

inches [millimeters]

## 2x4 and 2x5 Configurations

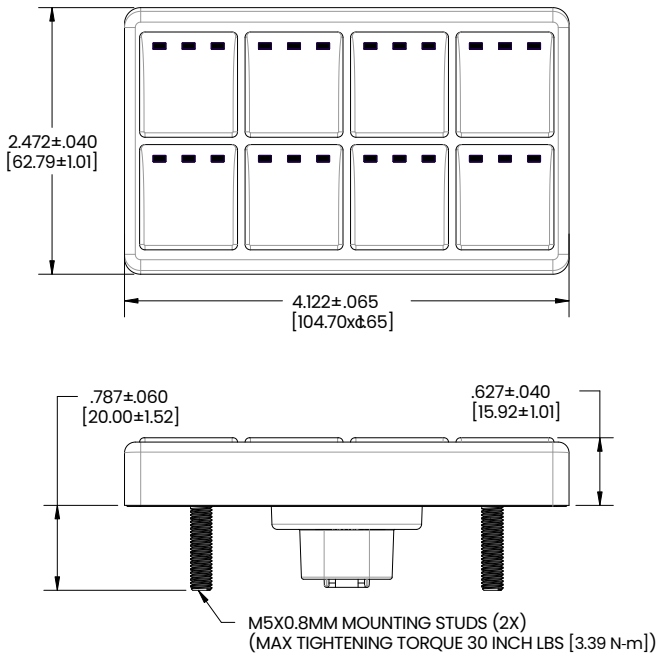


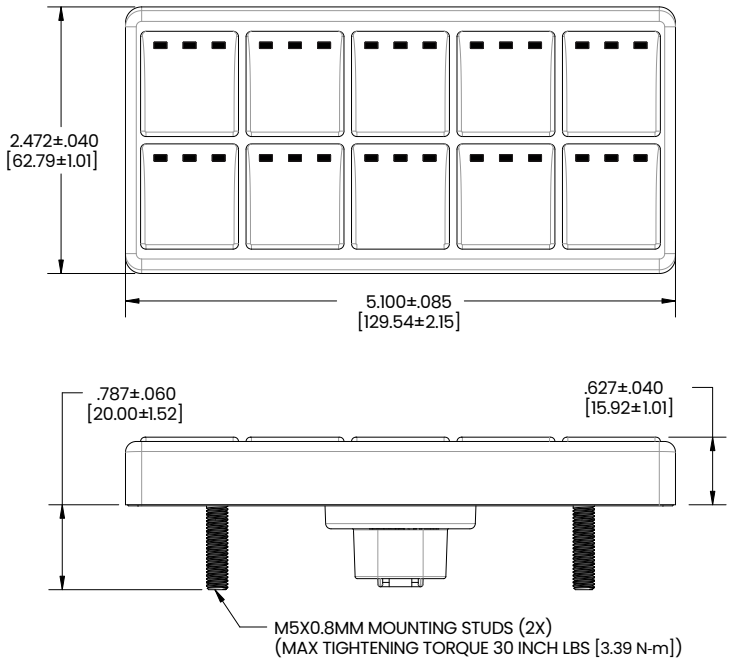


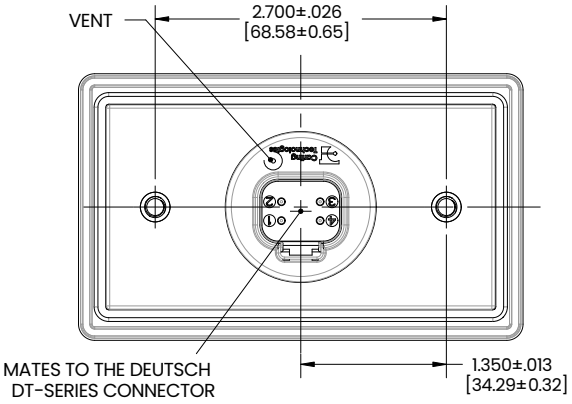


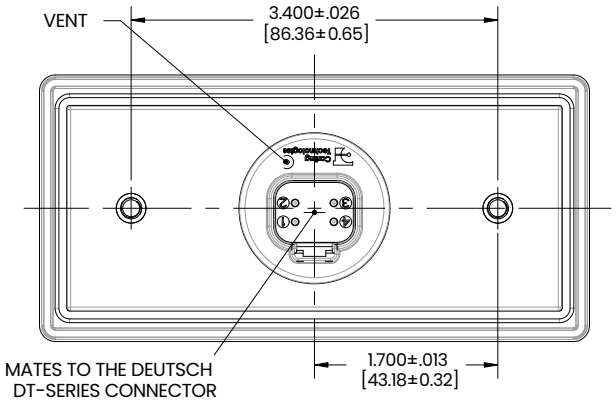


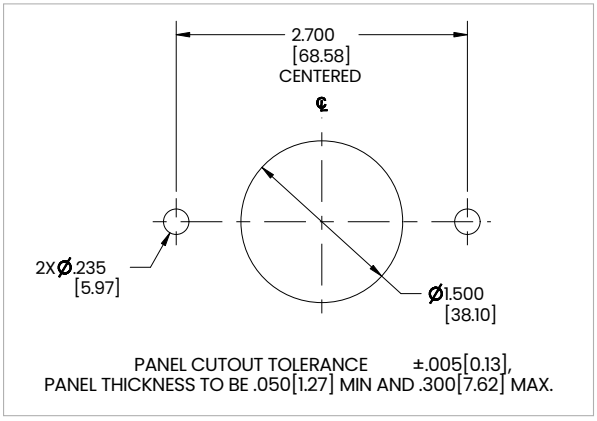


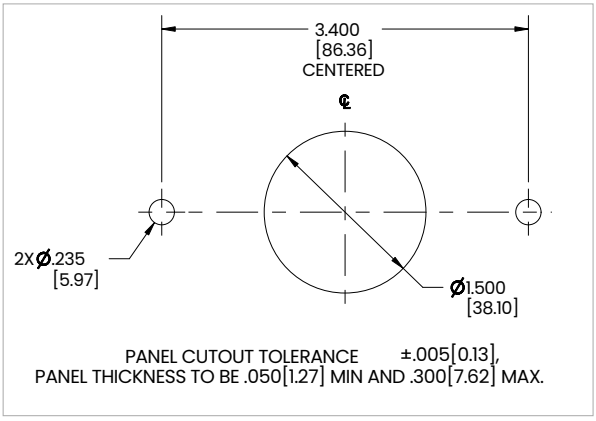




Notes:
1. Do not puncture or plug the vent

CLA-0164 Rev: A

*Manufacturer reserves the right to change product specification without prior notice.

# Dimensional Specs

inches [millimeters]

## 2x6 and 6x2 Configurations

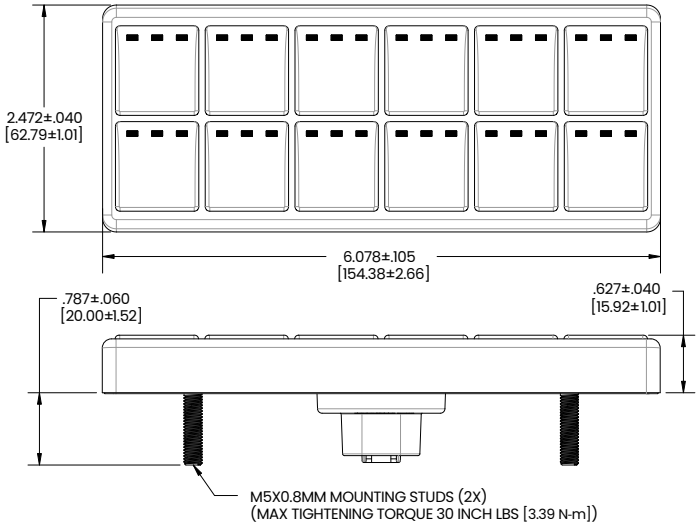


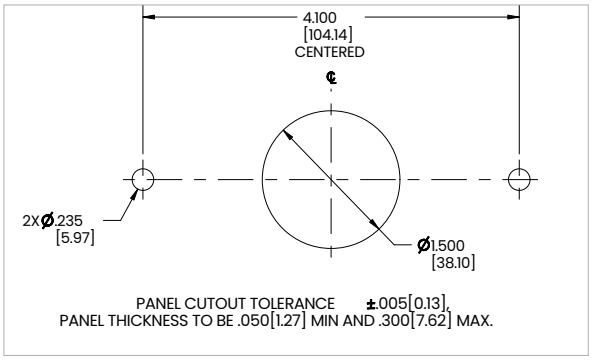


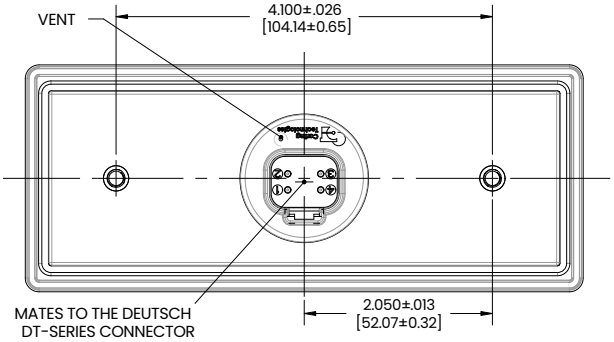


PIN OUT AS SHOWN BELOW

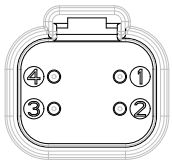


| NO. | DESIGNATION |
|---|---|
| 1 | POWER |
| 2 | GROUND |
| 3 | CAN H |
| 4 | CAN L |

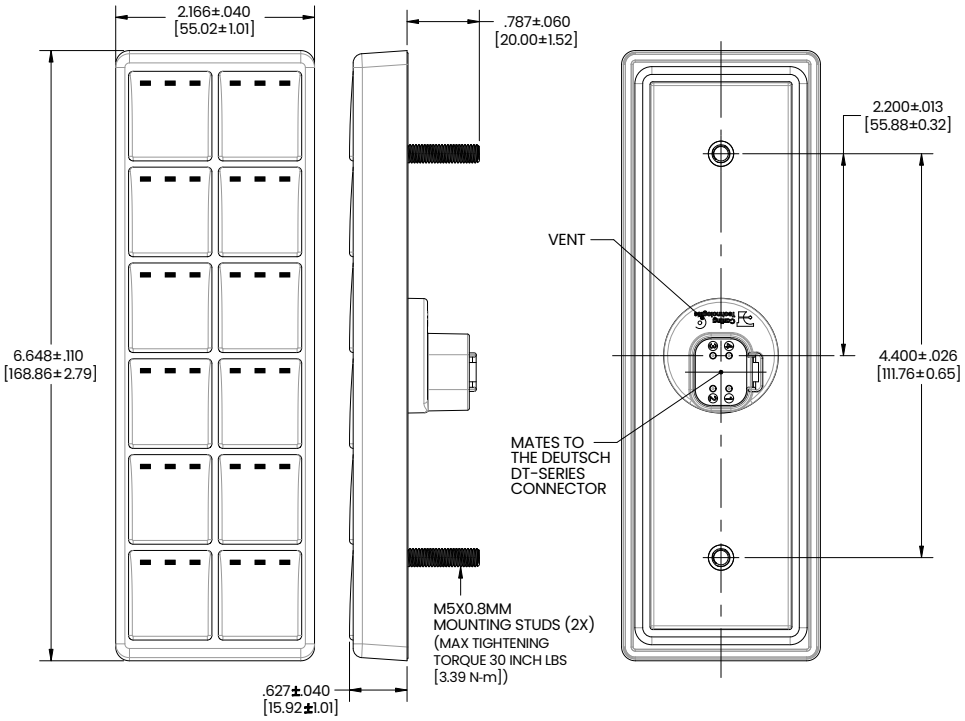


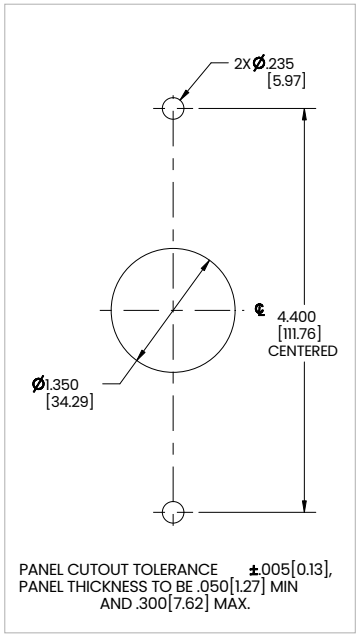


Notes:
1. Do not puncture or plug the vent





*Manufacturer reserves the right to change product specification without prior notice.

# Dimensional Specs

inches [millimeters]

## 3x2, 4x2 and 5x2 Configurations

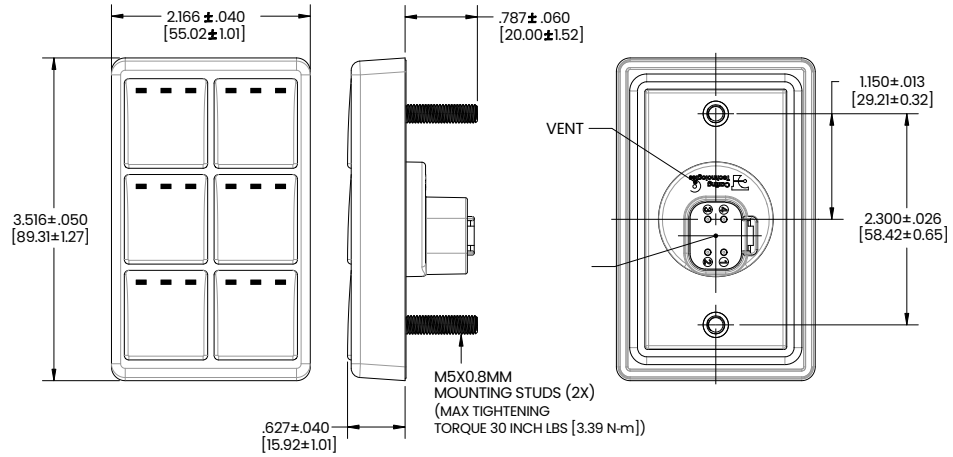


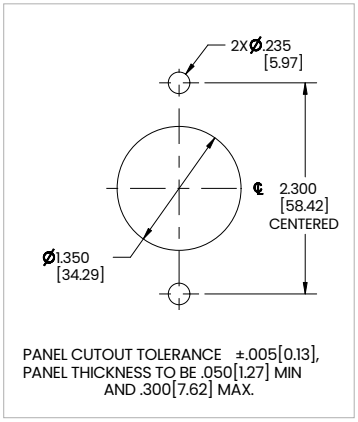


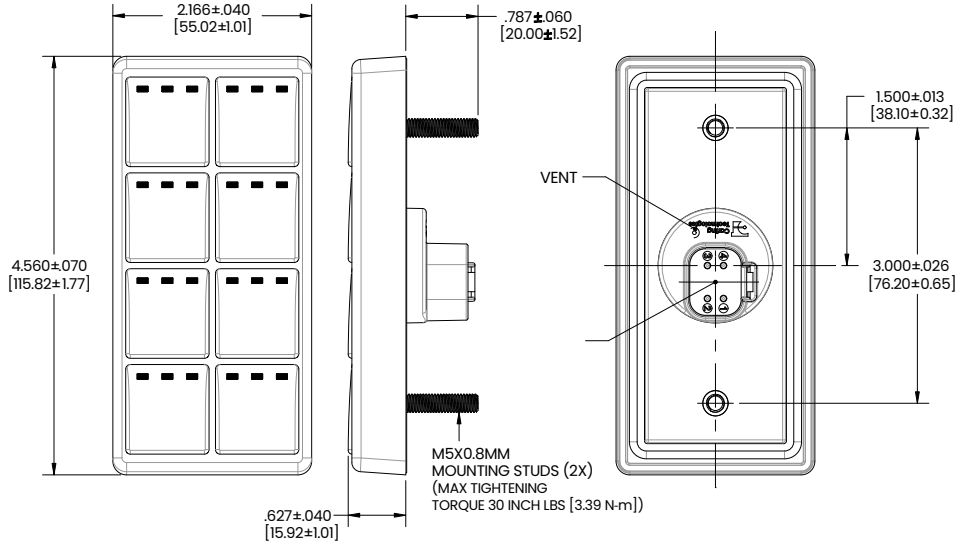


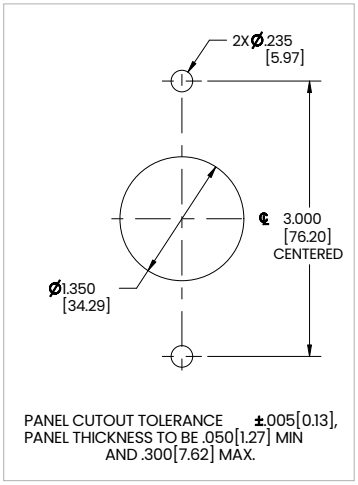


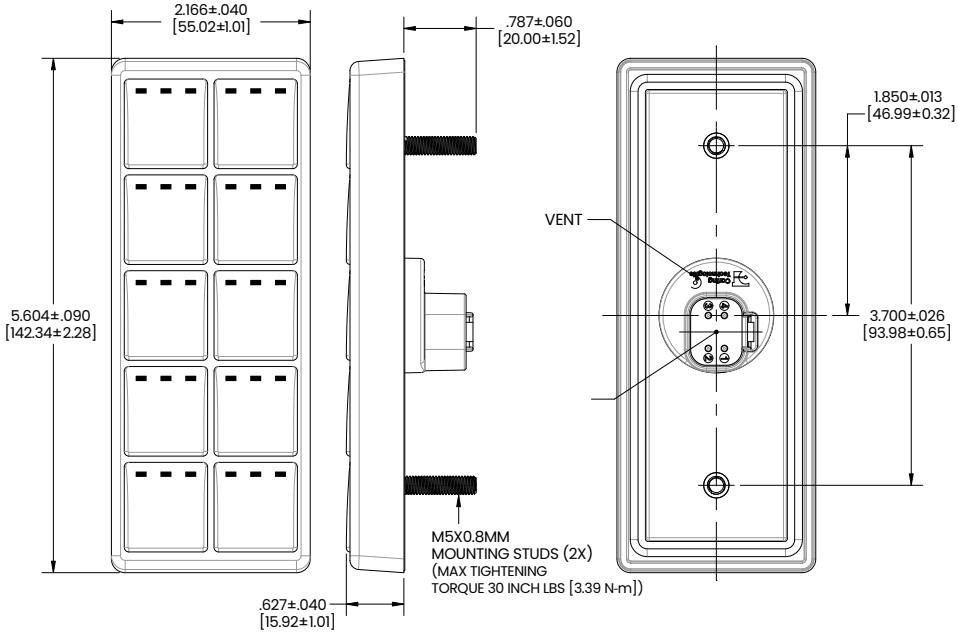


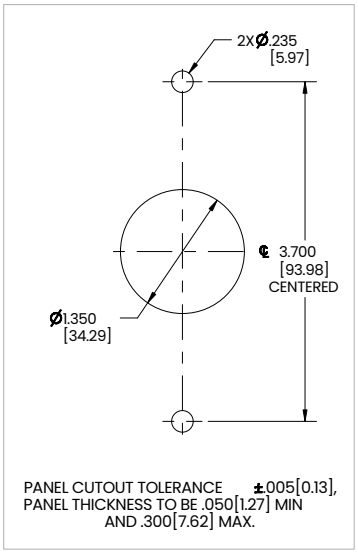


Notes:
1. Do not puncture or plug the vent





*Manufacturer reserves the right to change product specification without prior notice.

# Standard Legend Codes

| | | | | | | | | | | | | |
|---|---|---|---|---|---|---|---|---|---|---|---|---|
| YK | UA | UB | US | UV | UW | UX | UY | MP | MR | PX | MS | MT |
| VU | MW | NZ | NX | NY | YM | VW | PS | PW | PZ | WG | WM | RN |
| RP | YG | TX | NAV LIGHTS | COURT LIGHTS | PANEL LIGHTS | ANCH LIGHTS | HEAD LIGHTS | FOG LIGHTS | DASH LIGHTS | DOCK LIGHTS | BEACON | LIGHT |
| WY | WZ | UH | UJ | PD | PE | PF | VC | VJ | UF | UG | MU | TN |
| NS | PB | SE | VZ | YE | NN | RW | PU | WA | YN | UE | NM | RJ |
| NR | YD | TL | VR | SL | VA | UC | VN | PK | VY | UZ | RH | NU |
| NV | RB | RC | RK | RL | MZ | RG | WS | WT | UD | UR | WD | TY |
| PA | UK | WR | UU | UT | YR | PM | VV | WB | TB | TC | TD | TE |
| MY | PV | TA | TZ | WC | PT | PN | PH | RA | TU | TT | YL | SK |
| VS | UL | UM | WK | TS | VT | WL | VP | YJ | PJ | RY | UP | NW |
| NP | RE | RF | PP | PR | TV | PC | YT | YU | PL | WJ | MV | RR |
| TK | RT | SZ | VX | WF | WH | PG | SJ | YA | YB | RM | TM | RD |
| RS | UN | TP | TR | NT | MX | YC | TW | TJ | YF | TH | TF | TG |
| YS | YH | SX | RZ | YP | WN | WP | WW | WX | SA | SB | SC | SD |
| ST | SU | WU | WV | SV | SW | VB | VH | VK | VL | VM | WE | SF |
| SG | SS | RU | RV | RX | | | | | | | | |



CLA-0146 Rev: A

ISO compliant symbols. Consult factory for custom legends.