Cable Clamps

- for fastening single or multicore low, medium and high voltage cables.

ELPRESS

Cable Clamps for 3 cables

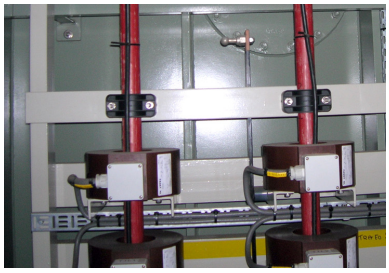

Cable Clamps for fastening three single or multicore low, medium and high voltage cables in a triangular formation. The installation is designed to provide superior mechanical strength. The width of the clamping area provides a controlled pressure on the cable and avoids damage to the insulation.

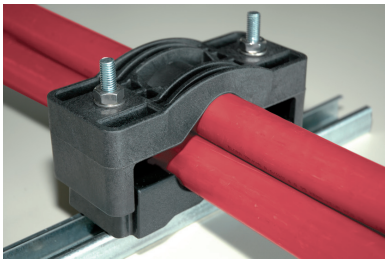

- Constructed for a mechanical strength up to 65 500 Nm
- Temperature range -40 – +120 C° (momentarily +225 C°)
- UL94 self-extinguishing and halogen-free for added safety
- Space saving
- For low and high voltage cables
- Easy installation
- Stackable

Cable clamp

-cable	Type		mm							
x Ø, mm		Art.nr.	L	B	l	d	H1	H2	h	a
3×27-38	TRIPLE27-38	8010-043200	180	75	125	15.5	63	12	35	16.5
3×38-51	TRIPLE38-51	8010-043300	195	80	145	15.5	84	16	45	20
3×51-69	TRIPLE51-69	8010-043400	220	85	170	15.5	109	21	58	26
3×69-90	TRIPLE69-90	8010-045100	252	90	215	15.5	134	29	72	30
3×90-118	TRIPLE90-118	8010-067300	321	100	270	15.5	180	27	89	33

TRIPLE27-38

TRIPLE38-51

TRIPLE51-69

TRIPLE69-90

TRIPLE90-118

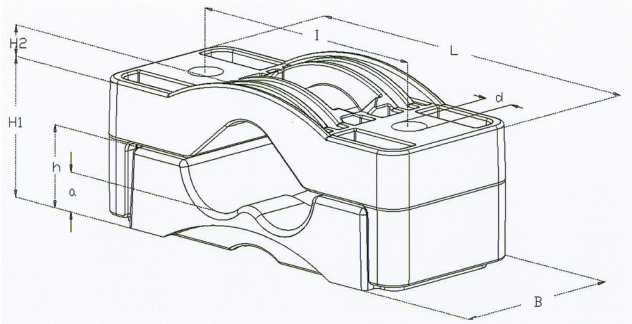

Art. nr. 8010-044200

Accessories: M10×120
Mounting kit, 2 threaded rods M10×120,
4 x M10 nuts and washers, 2 couplers.

Cable Clamps for 1 cable

Cable Clamps for fastening one single or multicore low, medium and high voltage cables. The installation is designed to provide superior mechanical strength. The width of the clamping area provides a controlled pressure on the cable and avoids damage to the insulation.

- Constructed for a mechanical strength of up to 68 000 Nm
- Temperature range -40 - + 120 C° (momentarily +225 C°)
- Tested by the Prof. Ir. Damstra Laboratory
- UL94 self-extinguishing and halogen-free for added safety
- For low and high voltage cables

Cable clamp										
-cable	**Type**		**mm**							
x Ø, mm		**Art.nr.**	**L**	**B**	**l**	**d**	**H1**	**H2**	**h**	**a**
1×26-38	SE26-38	8010-042900	92	60	60	12	33-49	7	18	7
1×36-52	SE36-52	8010-043000	105	60	75	12	39-55	15	23	8
1×50-75	SE50-75	8010-043100	126	60	95	12	46-71	22	30	9
1×75-100	SE75-100	8010-044700	200	80	150	15	70-95	32	45	10
1×100-135	SE100-135	8010-044800	225	85	175	15	85-120	43	58	10

SE26-38

SE36-52

SE50-75

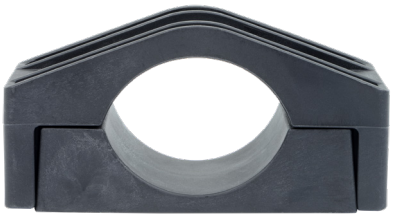

SE75-100

SE100-135

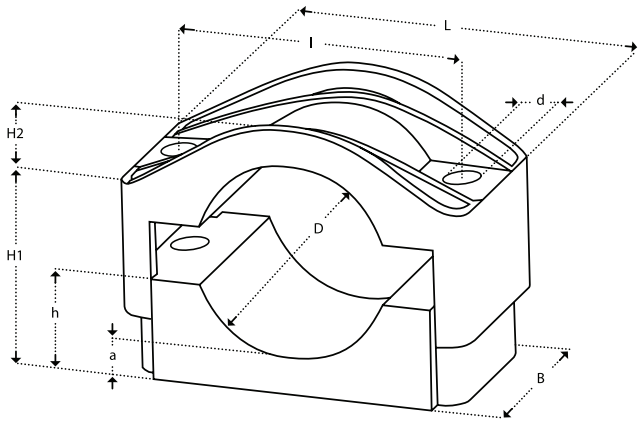

ELPRESS

QUALITY SINCE 1959

Cable Blocks for 4 cables

Cable Blocks are suitable for fastening cables with a diameter 12 mm (0.45 inch) up to 32 mm (1.26 inch) and a diameter of 32 mm up to 48 mm. By means of 2 block parts, 4 cables can be fastening along side each other. On the basis of the number of cables to be fastened, the number of block parts is decided. 2 block parts for 4 cables, 3 block parts for 8 cables and so on. The blocks can also be fastened along side each other by the clever dovetail connection.

- Constructed for a mechanical strength of 29 500 Nm
- Temperature range -40 – + 120 C° (momentarily +225 C°)
- UL94 self-extinguishing and halogen-free for added safety
- For low and high voltage cables
- Supplied in 2 blocks (for 4 cables)
- Stackable (max 6 blocks)

Cable clamp		
4-cable	**Type**	
x Ø, mm		**Art.nr.**
4×12-32	UNIFIXIM 4×12-32	8010-042800
4×32-48	UNIFIXIM 4×32-48	8010-044300

Two clamps

UNIFIX IM12-32

UNIFIX IM32-48

Art. nr. 8010-044200

Accessories: M10×120
Mounting kit, 2 threaded rods M10×120, 4 x M10 nuts and washers, 2 couplers.

Material information of Cable clamps

The Cable Clamps are manufactured from fiberglass-reinforced Polyamide and are unique in their additives, which results in a longer life span of 50 years. Polyamide is highly resistant against humidity, which makes the Cable Clamps suitable for both inside and outside installations. Because of the use of this raw material, the Cable Clamps are also resistant against

- corrosion
- ozone
- frost
- oil
- acids
- salts
- aggressive materials
- and UV radiation.

There is no reduction of strength and signs of degrading within temperature ranges from -40°C up to +120°C. (momentarily up to +225°C)

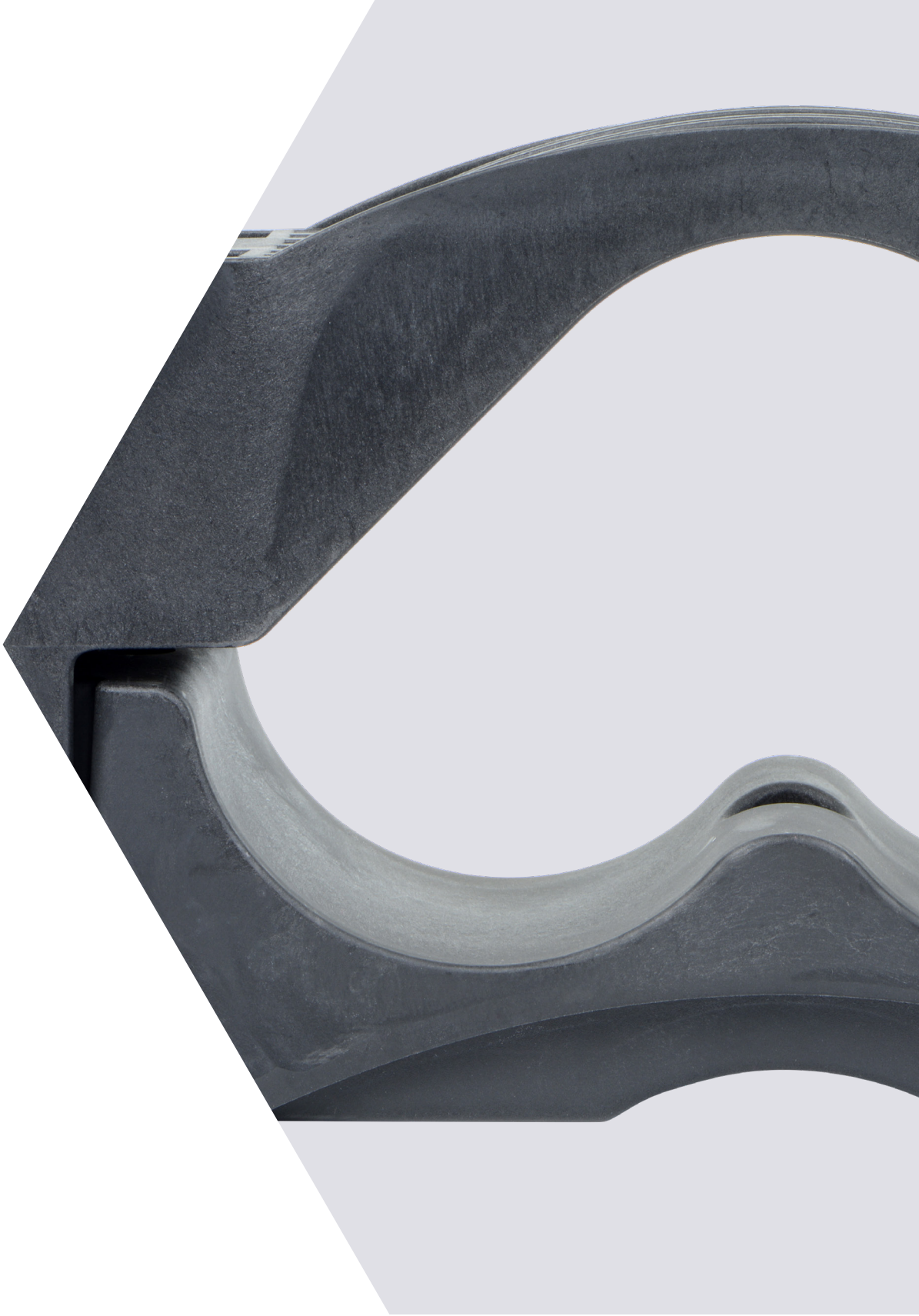

Elpress AB . P.O. Box 186, SE-872 24 KRAMFORS, Sweden
Tel: +46 612-71 71 00
E-mail: sales@elpress.se | www.elpress.net