Technical Specifications

Model Number:

PX4-4498R-E8

230V, 1Φ, 32A, 7.4kVA

LINE DRAWING

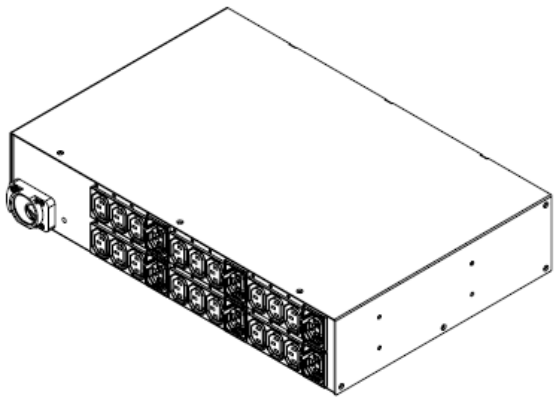

FEATURES

Energy Metering	Voltage (V), Current (A), Active Power (kW), Real Power (kVA), Energy (kWh), Power Factor
Metering Accuracy	Class 0.5 meter (see page 3 for details)
Metering per Input Line	Yes
Metering per Branch Circuit Breaker	Yes
Metering per Output Receptacle	Yes
Remote Outlet Switching	No
Power Quality Monitoring	Voltage and Current Harmonic Distortion; Distortion Power Factor; Voltage Dip and Voltage Swell; Neutral Current, Current Inrush, Crest Factor
Outlet Power Distribution	Alternating Branch
Replaceable Controller	Yes, hot-swappable
Environmental Sensor Ready	Yes
Networking	Gigabit (10/100/1000 BaseT) Ethernet port; Secondary, redundant (10/100/1000 BaseT) Ethernet port; Optional Wi-Fi (802.11a/b/g/n)
Remote Management	HTTP(s); SSH (CLI); Telnet; RS-232 (Serial); SNMP version v2/v3; SMTP; JSON-RPC API; MODBUS-TCP; Redfish API
Cascading	Yes, Max 16 PDUs can be daisy chained using a USB connection and 32 PDUs using Ethernet connection
Linking	Yes, a maximum of 8 PDUs can be linked using the PDU Link Port; PDU 1 is defined as the Primary PDU and can link up to 7 additional PDUs, called Link PDUs, totaling 8 PDUs

Technical Specifications

Model Number:

PX4-4498R-E8

230V, 1Φ, 32A, 7.4kVA

INPUT

Input Plug	IEC 60309 2P+E 6h 32A (2P3W)
Cord Length	3 meters (9.84 feet) standard
Cord Entry	Rear feed
Number of Power Cords	1
Input Current, Maximum	32A
Input Current, Rating	32A
Input Voltage, Nominal	230V
Input Voltage, Rated	200 - 240V
Input Frequency	50/60Hz
Power Capacity	6.4kVA at 200V, 7.7kVA at 240V

OUTPUT

Voltage, Nominal	230V
Voltage, Rated	200 - 240V
Receptacles (Output Connections)	(18) IEC320 C13, 10A; (6) Cx, 16A
Outlet Indicators	Yes, R/G/B LEDs; Outlet Powered On/Off, Above/Below Threshold, Outlet Service Mode - Outlet On/Off, Suspect Outlet/Trip Forensics - Outlet Off, Circuit Breaker Trip/Fuse Blown - Outlet On/Off, Boot Up Sequence
Outlet Locking	No
SecureLock (P-lock) Support	No
Overload Protection	(2) LEJBXV6-16

PHYSICAL

Color	Black powder coat (custom colors available)
Material of Construction	Extruded Aluminum
Unit Dimensions (WxDxH)	17.3" x 11.5" x 3.5" ; 440mm x 293mm x 88mm
Unit Weight	4.4 kg
Shipping Dimensions (WxDxH)	21.81" x 17.87" x 10.39" ; 554mm x 454mm x 264mm
Shipping Weight	8.95 kg
Mounting	RACK-KIT-PX-2U

Technical Specifications

Model Number:

PX4-4498R-E8

230V, 1Φ, 32A, 7.4kVA

ENVIRONMENTAL

Operating Temperature	60°C
Operating Relative Humidity	5% to 95% (non-condensing)
Operating Elevation	0 to 3048m; 0 to 10,000ft
Storage Temperature	-30 to 80°C/ -22 to 176°F
Storage Relative Humidity	0% to 95%
Storage Elevation	0 to 15,000m; 0 to 50,000ft

CONFORMANCE

Regulatory Approvals	CE, Canada ICES-003, Part 15 Class A of the FCC rules, RoHS compliant
Warranty	2-year manufacturer warranty

ACCURACY

	Input Measurement	Output Measurement
LCD & GUI Current	±0.2% at 0.01 A resolution	±0.2% at 0.01 A resolution
Voltage	±0.2% at 0.1 V resolution	±0.2% at 0.1 V resolution
Voltage, Neutral	±1% at 0.1 V resolution	n/a
Current, Neutral	±0.5% at 1% FS resolution (FS is PDU ampere rating)	n/a
Active Power	±0.5% at 1 W resolution	±0.5% at 1 W resolution
Apparent Power	±0.5% at 1 VA resolution	±0.5% at 1 VA resolution
Reactive Power	±1% at 1 VA reactive resolution	±1% at 1 VA reactive resolution
Power Factor	±1% at 0.01 resolution	±1% at 0.01 resolution
Crest Factor	±1% at 0.1 resolution	±1% at 0.1 resolution
Active Energy	±0.5% at 0.1 kWh resolution	±0.5% at 0.1 kWh resolution
Apparent Energy	±0.5% at 0.1 kVAh resolution	n/a
Reactive Energy	±1.0% at 0.1 kVAh resolution	±1.0% at 0.1 kVAh resolution
Voltage, Harmonic Distortion	1.0%	1.0%
Current, Harmonic Distortion	5.0%	5.0%

Branch Measurement

Current	±1% at 0.01 A resolution

Technical Specifications

Model Number:

PX4-4498R-E8

230V, 1Φ, 32A, 7.4kVA

CONTROL PANEL

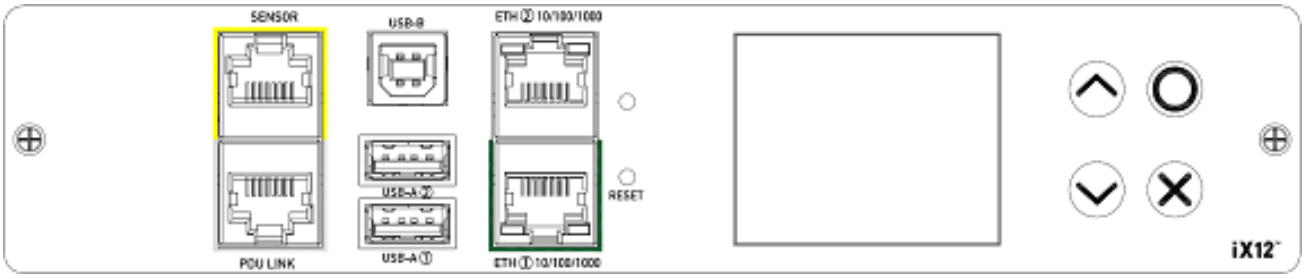

FEATURES

Controller Version	iX12
Swappable/Replaceable	Yes, hot-swappable
Onboard Display	Voltage, current, or active power (per line, or per receptacle /outlet); Alarms; Configuration information (name, ratings, IP/Networking information); Auto-flip orientation
SmartSensors	Yes, compatible sensors: Temperature, Humidity, Airflow, Differential Air Pressure, Water/Leak, Dust/Particle, Proximity/Motion, Vibration, and Sensor Hubs
SmartLock	Yes, compatible sensors: Contact and Contact Closure

PANEL FEATURES

Control Buttons	Navigate to the menu in the manual mode (Up, Down, Back, or Switch between automatic and manual modes, OK)
Multi-Color LCD	Shows information on the device, built-in components, and connected peripheral devices
Reset Button	Restarts the device's firmware without any loss of power to outlets
Dual Networking Gig E 10/100/1000 Ethernet Ports	Supports up to 1000 Mbps; also supports extended cascading
Dual (2) USB-A Ports	Supports USB-A wireless LAN adapters; iOS mobile devices; cascading for sharing a network connection. Power rating 5V/500mA
USB-B Port	Supports CLI and cascading for sharing a network connection
PDU Link Port	For power sharing, cascading, and current monitoring
Sensor Port	RJ45 connector; Power/control sensor packages/actuators, current monitoring; also supports Sensor Hubs

Technical Specifications

Model Number:

PX4-4498R-E8

230V, 1Φ, 32A, 7.4kVA

MECHANICAL DIAGRAM

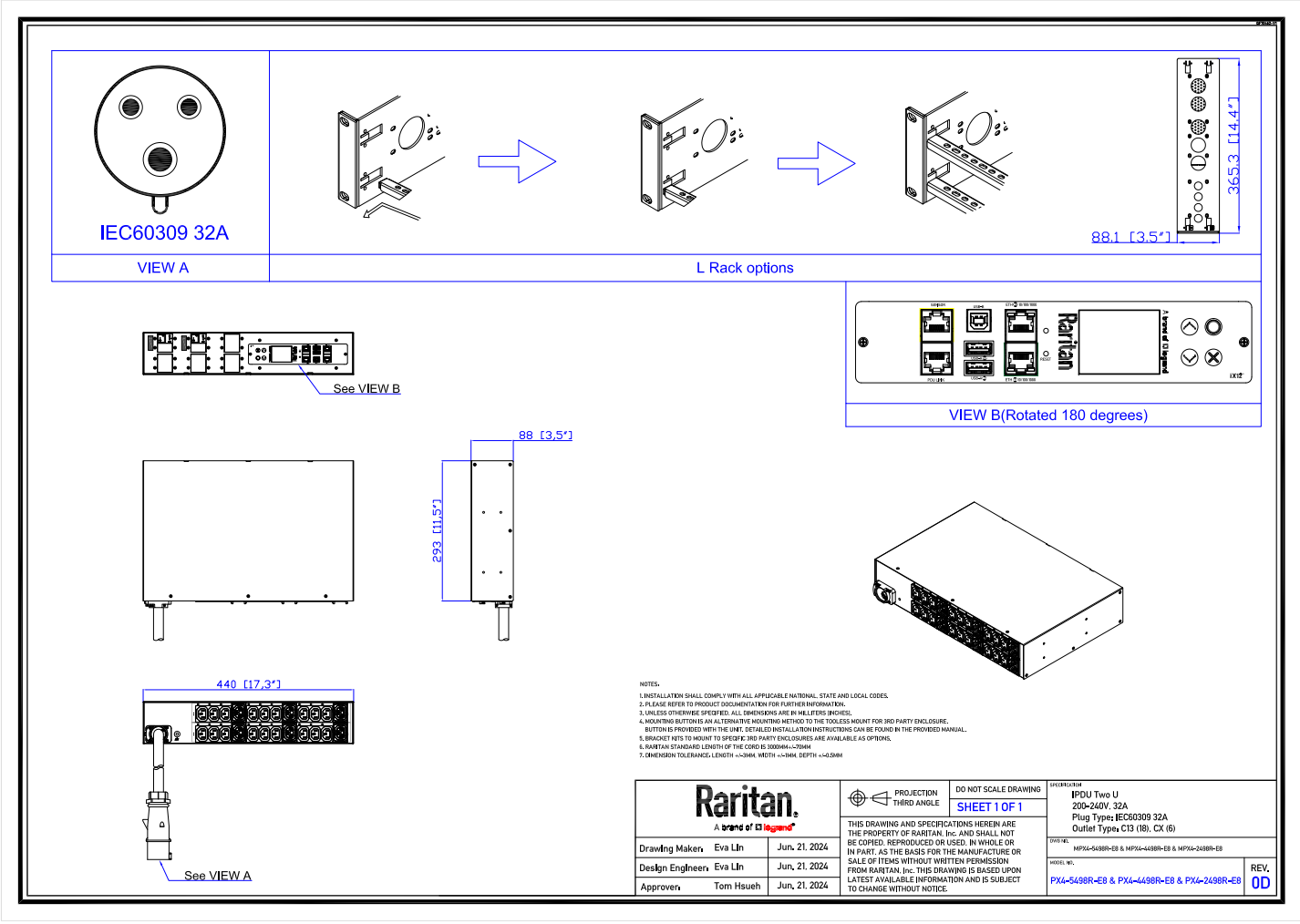

Technical Specifications

Model Number:

PX4-4498R-E8

230V, 1Φ, 32A, 7.4kVA

ELECTRICAL (ONE LINE) DIAGRAM

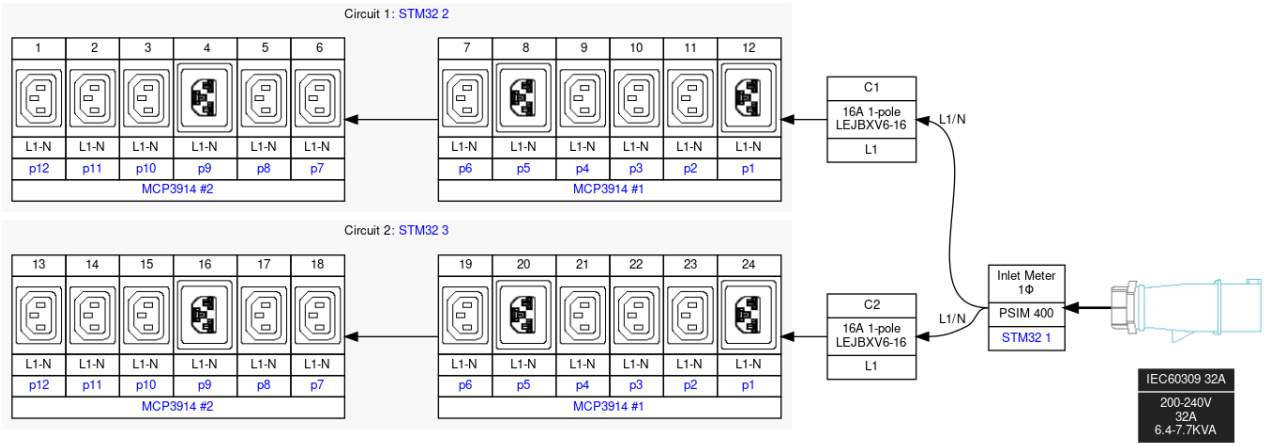

ADDITIONAL INFORMATION

Warranty: Raritan offers a standard 2-year limited parts and labor warranty. Extended support is available at the time of purchase. Contact your local Raritan representative for more information.

Patents: Information on Raritan patents is available at www.raritan.com/patents

"Global" models are typically for use in countries outside of North America. Contact your local Raritan representative for more information about which models are appropriate for your application.

Information in this document is current as of time of publishing. Contact your local Raritan representative for the most up-to-date information.

This datasheet was generated on June 25, 2025.

Interested in learning more about how Raritan products can help you manage and distribute power in your data center? Visit us online at www.raritan.com

©2023 Legrand. All rights reserved. The industry-leading brands of Raritan, Server Technology, Starline, and Ortronics empower Legrand's Data, Power & Control to deliver innovative solutions for data centers, building networks, and facility infrastructures.

PDF technology powered by Apryse™ and distributed by Legrand DPC, LLC under license. All rights reserved.