RCMB131-02

AC/DC sensitive residual current monitoring module
for measuring AC and DC currents up to ±100 mA



BENDER

RCMB131-02

AC/DC sensitive residual current monitoring module for measuring AC and DC currents up to ±100 mA



Device features

- AC/DC sensitive leakage and fault current monitoring for preventive maintenance
- Suitable for PCB mounting
- High resolution for implementing equipment leakage current monitoring
- Measurement signal output via PWM output
- Frequency range DC…2 kHz
- Compact design for monitoring nominal loads up to I_n = 32 A
- Low load current sensitivity due to fully shielded measuring current transformer
- Continuous monitoring of the connection to the measuring current transformer
- Integrated test function
- Supply voltage DC 12…24 V

Product description

The AC/DC sensitive residual current monitoring module monitors electrically earthed power supplies up to 300 V and connected loads up to nominal currents of 32 A for leakage and fault currents. The module is intended for installation in distribution equipment such as PDUs (Power Distribution Units), outlet boxes or multiple socket-outlets and is supplied with DC 12…24 V.

Applications

The RCMB131-02 is designed for installation in PDUs and outlet boxes. The module outputs the RMS value of the residual current via a PWM output, which is read out and evaluated by a higher-level circuit.

Functional description

The RCMB131-02 is used to measure residual currents and output the values via the PWM output. The residual current monitoring module measures both AC and DC currents. The RMS value is calculated from the DC component included in the residual current and the AC component below 2000 Hz. The module outputs the determined RMS value of the residual current at the PWM output.

The RCMB131-02 continuously checks the supply voltage and the connection of the internal measuring current transformer. The existing switching output S1 switches to alarm state when the set response value is exceeded or a malfunction occurs. ERR switches in case of an internal error.

When ERR switches, S1 (DC) is also switched simultaneously.

Ordering details

Type	Measuring range	Supply voltage U_s	Art. No.
RCMB131-02	0…100 mA (RMS)	DC 12…24 V	B94042132

Dimension diagram

Dimensions in mm

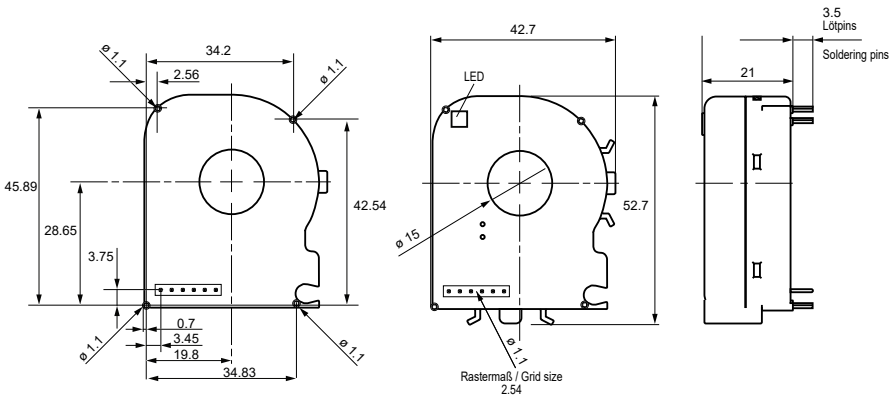

Wiring diagram

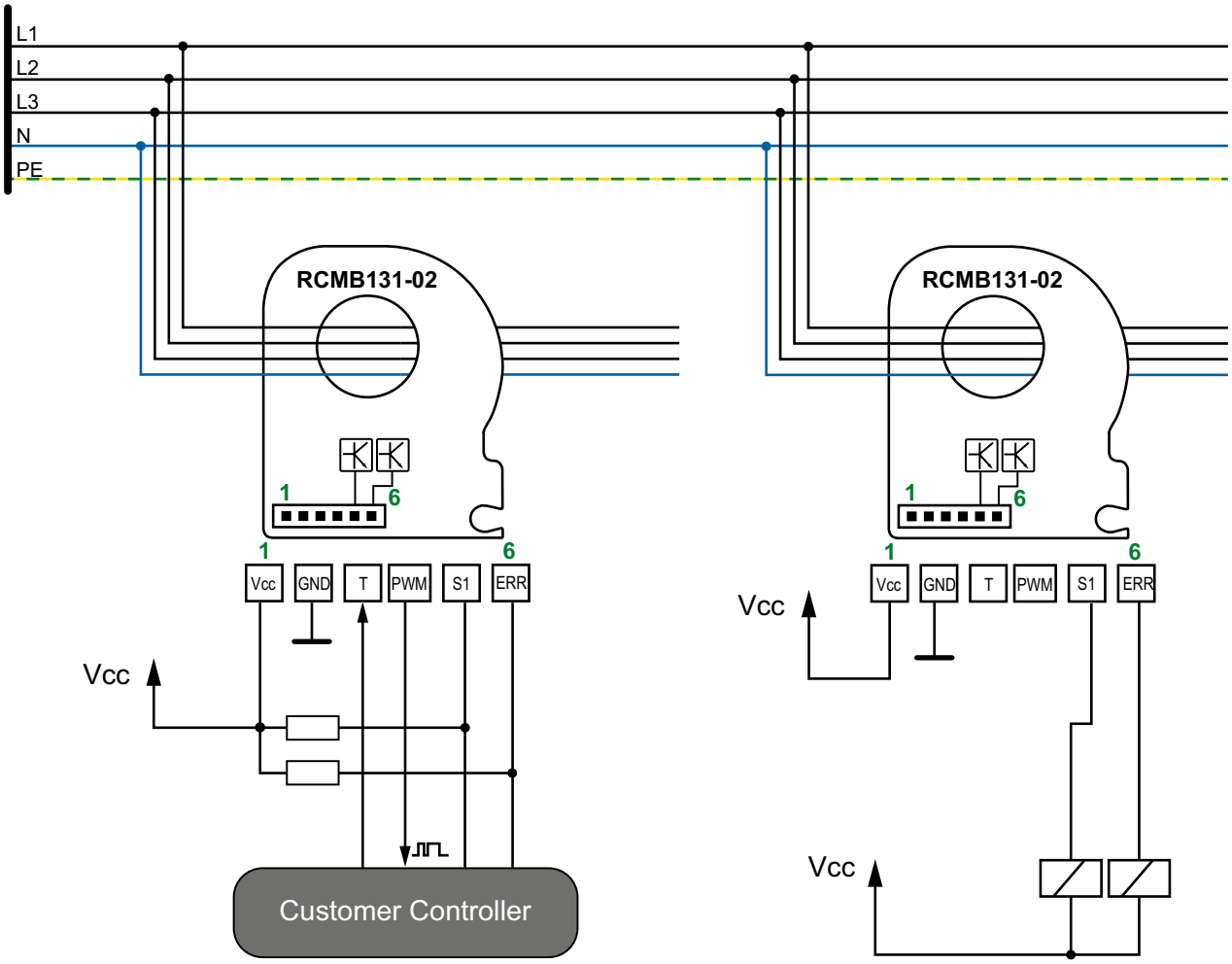

The maximum cable length must be limited to ≤ 10 m.

Pin assignment

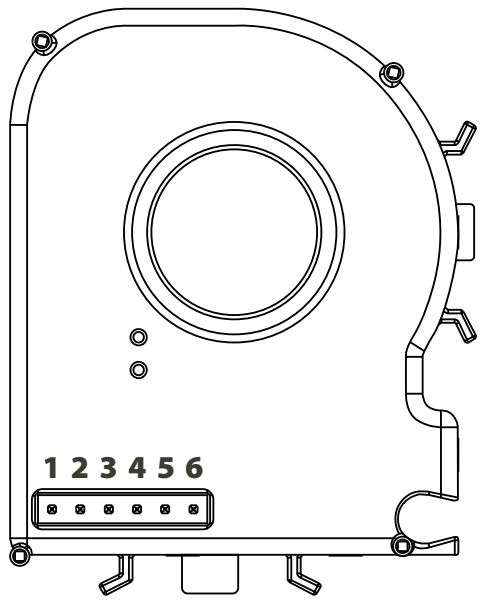

Pin	Name	Description
1	Vcc	Supply voltage (DC 12…24 V)
2	GND	Ground
3	T	Test
4	PWM	Measured value output (RMS 100 mA = 100 %)
5	S1	Switching output 1 (DC 6 mA, Open Collector)
6	ERR	Switching output Error (Open Collector)

Technical data

Insulation coordination according to IEC 60664-1

Primary circuit	monitored primary conductors
Secondary circuit	Connections Vcc, GND, T, PWM, S1, ERR
All following specifications apply to the insulation between the primary and secondary circuit	
Rated voltage	300 V
Overvoltage category	III
Rated impulse voltage	4 kV
Operating altitude	up to 3000 m AMSL
Rated insulation voltage	320 V
Pollution degree	2
Safe separation (reinforced insulation)	between primary and secondary circuit
Voltage test acc. to IEC 61010-1	AC 2.2 kV

Voltage supply

Supply voltage U_s	DC 12…24 V
Operating range of the supply voltage	±20 %
Ripple	100 mV
Power consumption	< 0.75 W

Measuring circuit

Internal diameter primary conductor opening	15 mm
Measured value evaluation	DC, RMS
Characteristics according to IEC 60755	AC/DC sensitive, type B
Response value $I_{\Delta n1}$	DC 6 mA
Response tolerance $I_{\Delta n1}$	0.7…1.0 x $I_{\Delta n1}$
Measuring range	AC/DC ±300 mA
Resolution	< 0.2 mA
Frequency range	DC…2 kHz
Measuring time	180 ms

Operating uncertainty

DC…500 Hz	±(5 % + 0.5 mA)
501…1000 Hz	±(15 % + 0.5 mA)
1001…2000 Hz	±(50 % + 0.5 mA)

Time response

Response time t_{ae} (relay switching time of 10 ms considered)	
for 1 x $I_{\Delta n}$	≤ 290 ms
for 2 x $I_{\Delta n}$	≤ 140 ms
for 5 x $I_{\Delta n}$	≤ 30 ms
Recovery time t_b	≤ 2s

Disturbances

Load current I_n	32 A

Connection

Max. Cable length	≤ 10 m

Outputs

Switching outputs S1, ERR	Open Collector, not short-circuit-proof
Switching capacity	40 V / 50 mA
Hysteresis	≤ 30 %
PWM	PWM signal, push pull
Internal resistance PWM signal	4.7 kΩ
Voltage HIGH level	3.1…3.6 V
Voltage LOW level	0…0.6 V
Frequency PWM signal	8 kHz
Specification of the PWM signal	(0…100) % = (0…100) mA
Output resistance	not short-circuit-proof

Response value assignment

$I_{\Delta n1}$ (DC)	S1
Internal error	ERR

Environment/EMC

EMC	DIN EN IEC 62020-1:2021-10 (IEC 62020-1:2020-04 Ed. 1.0), where applicable
Ambient temperature (incl. primary conductors routed through module)	-25…+70 °C

Classification of climatic conditions acc. to IEC 60721
(related to temperature and relative humidity)**:**

Stationary use (IEC 60721-3-3)	3K22
Transport (IEC 60721-3-2)	2K11
Long-term storage (IEC 60271-3-1)	1K22

Classification of mechanical conditions acc. to IEC 60271

Stationary use (IEC 60721-3-3)	3M11
Transport (IEC 60721-3-2)	2M4
Long-term storage (IEC 60271-3-1)	1M12

Other

Operating mode	continuous operation
Mounting	any position
Protection class	IP 30
Flammability rating	UL94 V-0
Service life at 40 °C	10 years
Software	D0604
Documentation number	D00354

* = factory settings

Bender GmbH & Co. KG

Londorfer Straße 65
35305 Grünberg
Germany

Tel.: +49 6401 807-0
info@bender.de
www.bender.de

© Bender GmbH & Co. KG, Germany
Subject to change!
The specified standards take into account the edition valid until 05.2024 unless otherwise indicated.