RCMB131-01

AC/DC sensitive residual current monitoring module
for measuring AC and DC currents up to ±100 mA



BENDER

RCMB131-01

AC/DC sensitive residual current monitoring module for measuring AC and DC currents up to ±100 mA



Device features

- AC/DC sensitive leakage and fault current monitoring for preventive maintenance
- Suitable for PCB mounting
- High resolution for implementing equipment leakage current monitoring
- Measured value and alarm transmission via Modbus RTU (RS-485)
- Frequency range DC…2 kHz
- Compact design for monitoring nominal loads up to I_n = 32 A
- Low load current sensitivity due to fully shielded measuring current transformer
- Continuous monitoring of the connection to the measuring current transformer
- Integrated test function
- Supply voltage DC 12…24 V

Product description

The AC/DC sensitive residual current monitoring module monitors electrically earthed power supplies up to 300 V and connected loads up to nominal currents of 32 A for leakage and fault currents.

The module is intended for installation in distribution equipment such as PDUs (Power Distribution Units), outlet boxes or multiple socket-outlets and is supplied with DC 12…24 V.

Applications

The RCMB131-01 is designed for installation in PDUs and outlet boxes. The module can communicate with a master via an RS-485 interface via Modbus RTU.

Functional description

The RCMB131-01 is used to measure residual currents and output the values via an interface. The residual current monitoring module measures both AC and DC currents. The RMS value is calculated from the DC component included in the residual current and the AC component below 2000 Hz. The RCMB131-01 continuously checks the connection of the internal measuring current transformer.

Via the RS-485 interface

- a signal proportional to the RMS value is transmitted (measured value update every 180 ms)
- alarm messages are signalled
- response values are configured
- a functional test can be started

The existing switching outputs S1 and S2 switch to alarm state when the set response value is exceeded or a malfunction occurs.

When S2 (RMS) switches, S1 (DC) is also switched simultaneously.

Ordering details

Output range	Supply voltage U_s	Type	Art. No.
0…100 mA (RMS)	DC 12…24 V	RCMB131-01	B94042131

Dimension diagram

All dimensions in mm

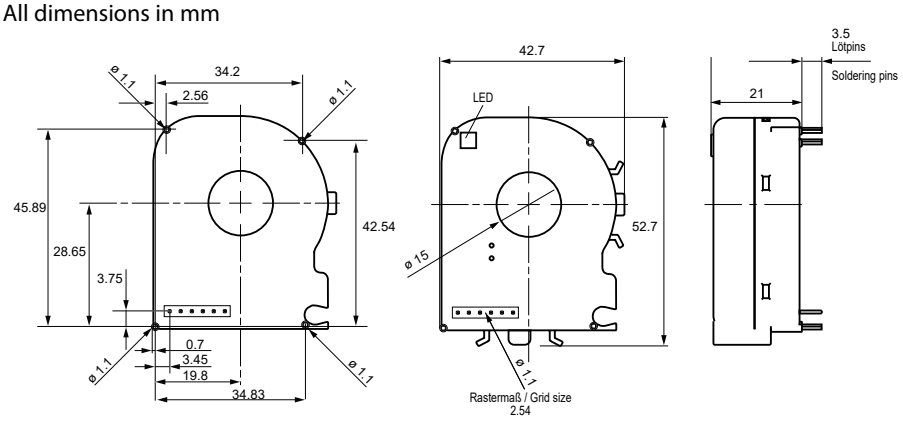

Wiring diagram

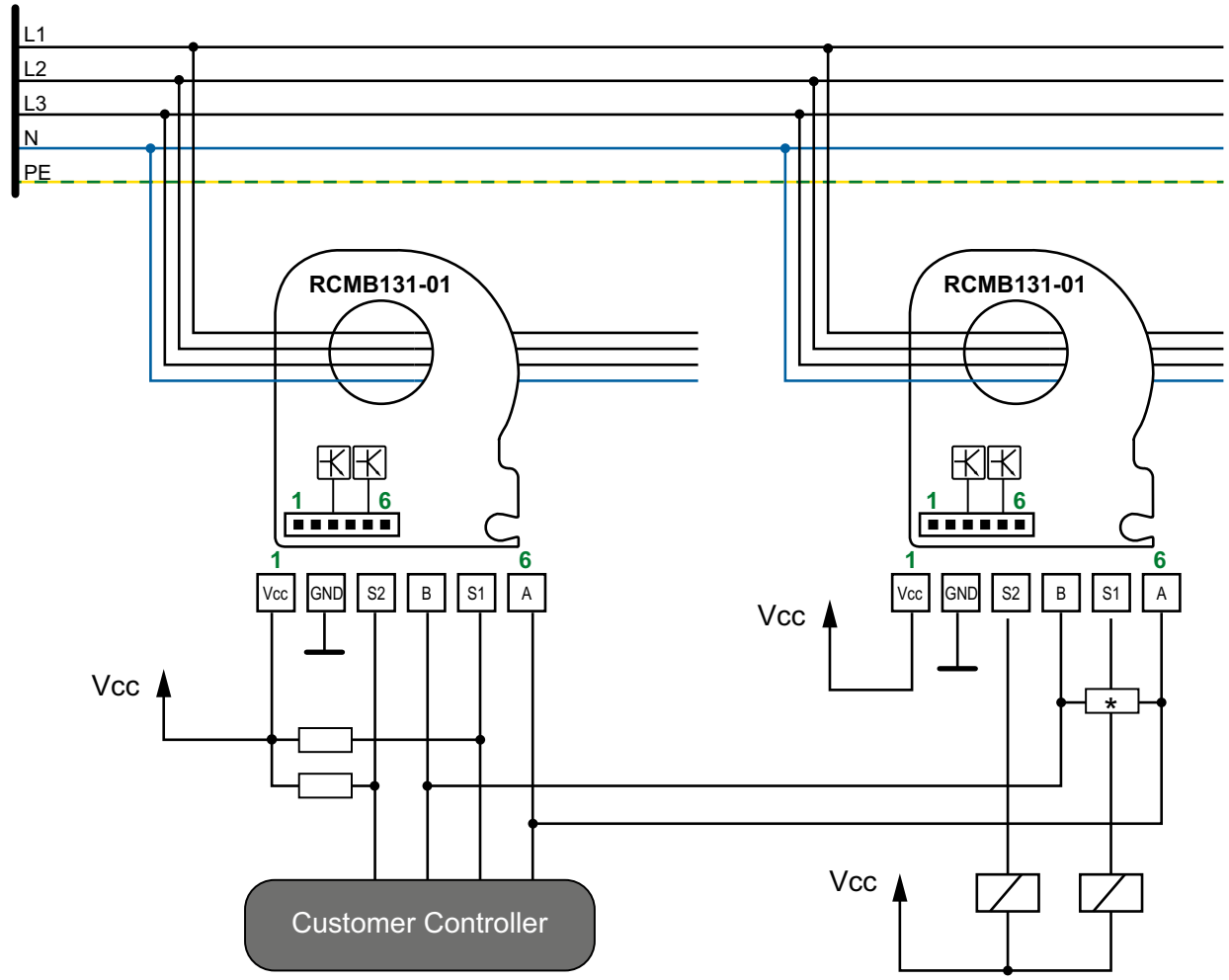

* Terminating resistor 120 Ω must only be set on the last device in the RS-485 bus chain

The maximum cable length must be limited to ≤ 10 m.

Pin assignment

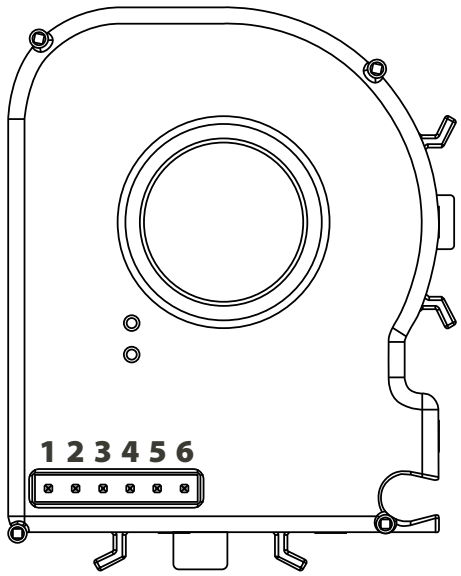

Pin	Name	Description
1	Vcc	Supply voltage (DC 12…24 V)
2	GND	Ground
3	S2	Switching output 2 (RMS)
4	B	RS-485-B
5	S1	Switching output 1 (DC)
6	A	RS-485-A

The switching outputs S1 and S2 are for monitoring purposes only and may only be used from a set response differential current set differential response current $I_{\Delta n} \geq 6$mA DC or RMS.

Technical data

Insulation coordination according to IEC 60664-1

Primary circuit	monitored primary conductors
Secondary circuit	Connections Vcc, GND, A, B, S1, S2
All following specifications apply to the insulation between the primary and secondary circuit	
Rated voltage	300 V
Overvoltage category	III
Rated impulse voltage	4 kV
Operating altitude	up to 3000 m AMSL
Rated insulation voltage	320 V
Pollution degree	2
Safe separation (reinforced insulation)	between primary and secondary circuit
Voltage test acc. to IEC 61010-1	AC 2.2 kV

Voltage supply

Supply voltage U_s	DC 12…24 V
Operating range of the supply voltage	±20 %
Ripple	100 mV
Power consumption	< 0.75 W

Measuring circuit

Internal diameter primary conductor opening	15 mm
Measured value evaluation	DC, RMS
Measuring range	AC/DC ±300 mA
Characteristics according to IEC 60755	AC/DC sensitive, type B
$I_{\Delta n1}$	
Response value	DC 3.5…100 mA (* 6 mA)
Response tolerance	0.7…1.0 x $I_{\Delta n1}$
$I_{\Delta n2}$	
Response value	RMS 3.5…100 mA (* 30 mA)
Response tolerance	
DC…1 kHz	0.7…1.0 x $I_{\Delta n2}$
1…2 kHz	1.0…2.0 x $I_{\Delta n2}$
Output range	0…100 mA (RMS)
Resolution	< 0.2 mA
Frequency range	DC…2 kHz
Measuring time	180 ms

Operating uncertainty

DC…500 Hz	±(5 % +0.5 mA)
501…1000 Hz	±(15 % +0.5 mA)
1…2 kHz	-(50 % ±0.5 mA)

Time response

Response time tae (relay switching time of 10 ms considered)	
for 1 x $I_{\Delta n}$	≤ 290 ms
for 2 x $I_{\Delta n}$	≤ 140 ms
for 5 x $I_{\Delta n}$	≤ 30 ms
Recovery time t_b	≤ 2s

Disturbances

Load current I_n	32 A

Response value assignment

$I_{\Delta n1}$ (DC)	S1
$I_{\Delta n2}$ (RMS)	S2

Connection

Max. Cable length	≤ 10 m

Outputs

Interface	RS-485
Protocol	Modbus RTU
Switching outputs	Open Collector, not short-circuit-proof
Switching capacity	40 V / 50 mA
Output voltage LOW level	0…0.6 V
Output voltage HIGH level	3.1…3.6 V
Hysteresis	≤ 30 %

Environment/EMC

EMC	DIN EN IEC 62020-1:2021-10 (IEC 62020-1:2020-04 Ed. 1.0), where applicable
Ambient temperature (incl. primary conductors routed through module)	-25…+70 °C

Classification of climatic conditions acc. to IEC 60721
(related to temperature and relative humidity)**:**

Stationary use (IEC 60721-3-3)	3K22
Transport (IEC 60721-3-2)	2K11
Long-term storage (IEC 60271-3-1)	1K22

Classification of mechanical conditions acc. to IEC 60271

Stationary use (IEC 60721-3-3)	3M11
Transport (IEC 60721-3-2)	2M4
Long-term storage (IEC 60271-3-1)	1M12

Other

Operating mode	continuous operation
Mounting	any position
Protection class	IP 30
Flammability rating	UL94 V-0
Service life at 40 °C	10 years
Software	D0604
Documentation number	D00358

* = factory settings

Bender GmbH & Co. KG

Londorfer Straße 65
35305 Grünberg
Allemagne

Tel.: +49 6401 807-0
info@bender.de
www.bender.de

© Bender GmbH & Co. KG, Allemagne
Sous réserve de modifications !
Les normes indiquées tiennent compte de l'édition valable jusqu'au 05.2024 sauf indication contraire.