LINETRAXX® MRCDB423

Modular residual current device type B for additional protection (protection against indirect contact) in earthed systems (TN and TT systems)





MRCDB423_D00396_01_D_XXENN/08.2021

LINETRAXX® MRCDB423

Modular residual current device type B for additional protection (protection against indirect contact) in earthed systems (TN and TT systems)



MRCDB423

Device features

- AC/DC sensitive MRCD type B in accordance with IEC 60947-2 Annex M
- Use as modular residual current protective device for additional protection in earthed systems
- Operating characteristic type B in accordance with IEC 60755
- RMS value measurement of the residual current
- Alarm and prewarning indication via display and LEDs
- Alarm and prewarning output via relays (K1/K2)
- Control of a switching element with isolating properties via relay K2
- Measuring current transformer connection monitoring
- Fault memory

Certifications

CE UKCA

Product description

The AC/DC sensitive MRCDB423 with the corresponding CTUB101-CTBC… measuring current transformers are used as additional protection (protection against indirect contact) in earthed systems (TN and TT systems) in which AC or DC fault currents may occur. Part of these systems are particularly loads containing six-pulse rectifiers or one-way rectifiers with smoothing, such as converters, battery chargers, construction site equipment with frequency-controlled drives.

Since the values are measured with measuring current transformers, the MRCDB423 is almost independent of the nominal voltage and the operating current of the monitored system.

The response value $I_{\Delta n2}$, the response delay t_{on2} as well as the currently measured residual current I_{Δ} are shown on the standard display.

Function

After connecting the supply voltage U_s, the start-up delay is active. During start-up delay "*t*", the device is in alarm state, which means that the output relays K1 and K2 are open and thus the installation is switched off. During start-up delay, changes on the measured residual currents do not influence the relays K1/K2. The residual current measurement is carried out via an external CTUB101-CTBC20(P)…210(P) measuring current transformer. The present measured value is indicated on the LC display. This allows changes to be detected, e.g. when outgoing circuits are connected to the system.

If the set value of the prewarning $I_{\Delta n1}$ is exceeded, response delay t_{on1} starts. After t_{on1} has elapsed, the output relay K1 switches and the prewarning LED lights up. The fault remains stored in the device: The output relay K1 remains in alarm state and the prewarning LED lights until the reset button "R" is pressed or the supply voltage is interrupted. The residual current measurement continues to be carried out.

If the set residual operating current $I_{\Delta n2}$ is exceeded, response delay t_{on2} starts. After t_{on2} has elapsed, output relays K1 and K2 switch. Output relay K2 trips the circuit breaker, which disconnects the outgoing circuit to be monitored. The prewarning and main alarm LEDs light up. The fault remains stored in the device: Both output relays remain in alarm state and the LEDs light until the reset button "R" is pressed or the supply voltage is interrupted.

Since the installation has been switched off, residual current measurement is no longer possible. After switching off, an automatic offset measurement is carried out.
The described device combination meets the requirements of IEC 60947-2 Annex M for an MRCD protective device.

The device function can be tested using the test button "T". Parameters are assigned to the device via the LCD and the control buttons on the front panel; this function is password-protected.

Dimension diagram XM420

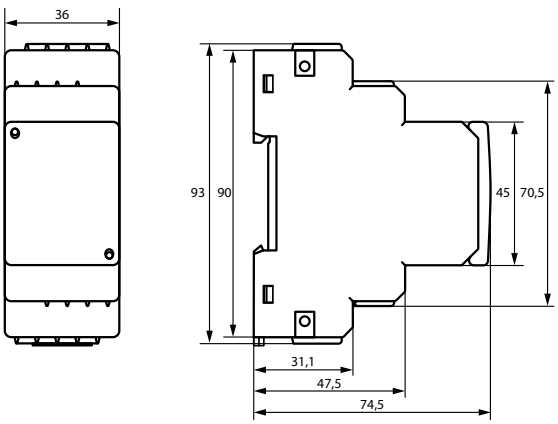

Wiring diagram

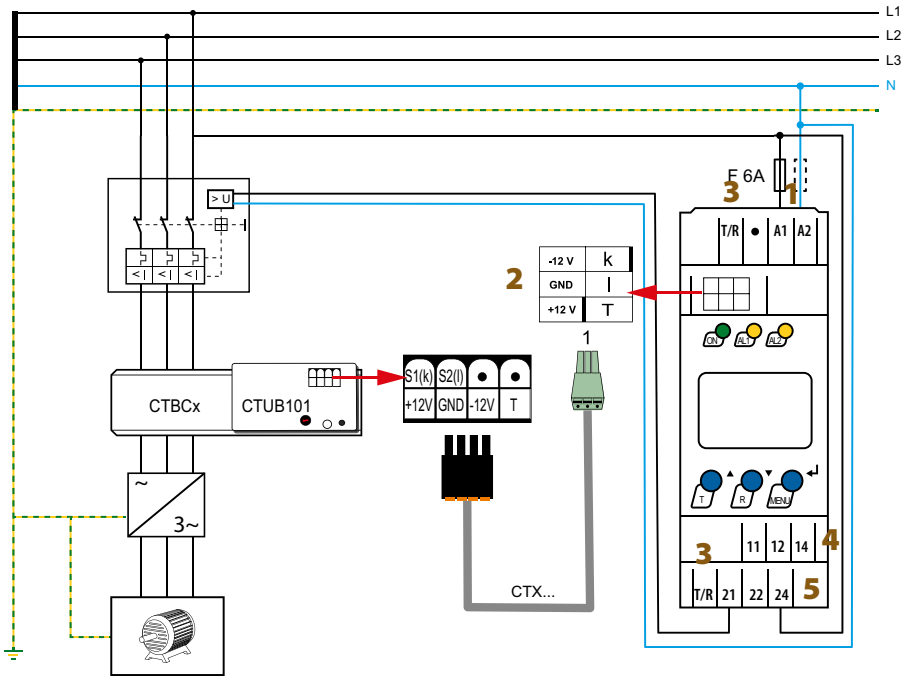

1 - **A1, A2** Connection to supply voltage U_s
2 - **1** Socket for connection cable of measuring current transformer
3 - **T/R** Connection for a combined external test and reset button
4 - **11, 12, 14** Alarm relay K1 (alarm)
5 - **21, 22, 24** Alarm relay K2

Wiring diagram measuring current transformers

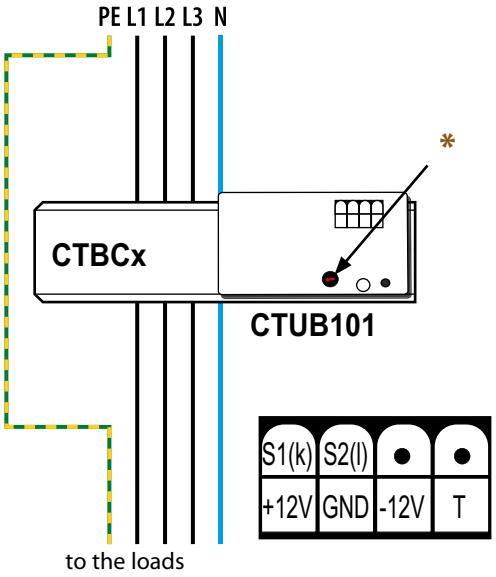

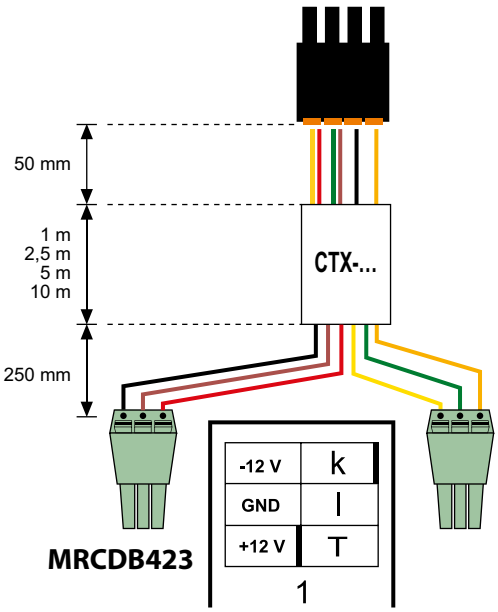

* The measuring range must be set according to the response value in the evaluator.

Dimension diagrams CTUB10…-CTBC…

A

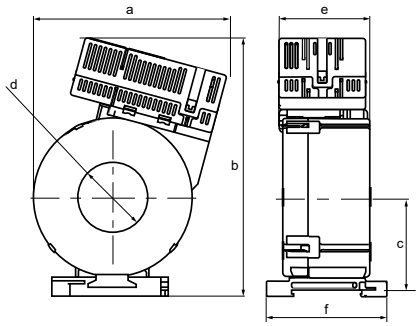

B

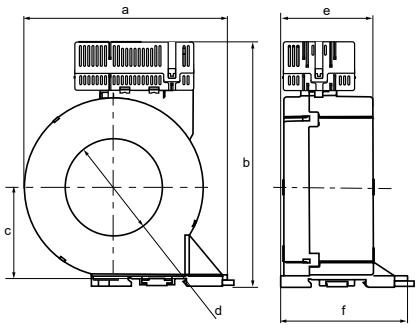

C

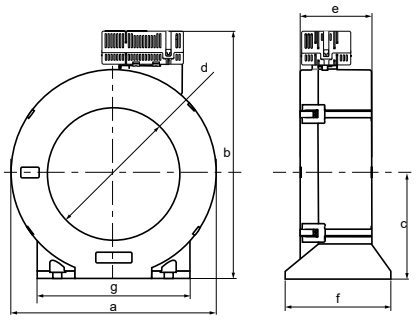

D

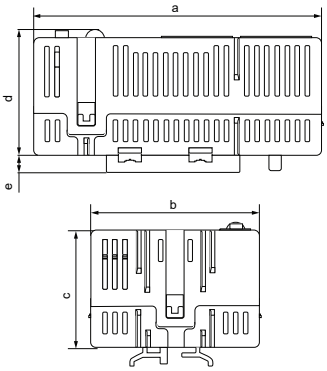

Dimensions (mm)								
	Type	a	b	c	d	e	f	g
A	CTUB10…-CTBC20(P)	75	83	37	ø 20	46	60.5	–
	CTUB10…-CTBC35(P)	97	130	47	ø 35	46	61	–
B	CTUB10…-CTBC60(P)	126	151	57	ø 60	56	78	–
C	CTUB10…-CTBC120(P)	188	225	96	ø 120	65	96	139
	CTUB10…-CTBC210(P)	302	339	153	ø 210	67	113	277
D	CTUB10…	74	44	30	32	4.6	–	–

Tolerance: ±0.5 mm

Mountings

CTBC20(P)/CTBC35(P)

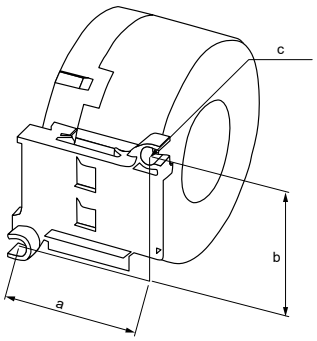

CTBC60(P)

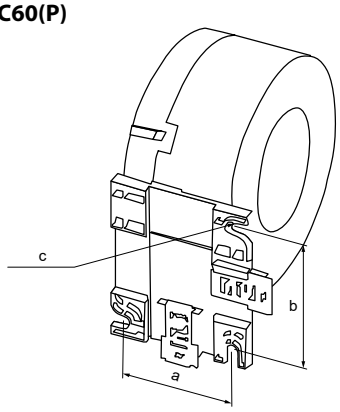

CTBC120(P)/CTBC210(P)

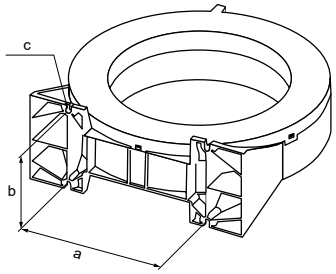

Dimensions (mm)			
Type	a	b	c
CTBC20(P) 20 mm	31.4	49.8	2 x ø 5.5
CTBC35(P) 35 mm	49.8	49.8	2 x ø 5.5
CTBC60(P) 60 mm	56	66	3 x ø 6.5
CTBC120(P) 120 mm	103	81	4 x ø 6.5
CTBC210(P) 210 mm	180	98	4 x ø 6.5

Technical data MRCDB423

Insulation coordination acc. to IEC 60664-1/IEC 60664-3

MRCDB423-D-1:	
Rated voltage	100 V
Overvoltage category/pollution degree	III/2
Rated impulse voltage	2.5 kV
MRCDB423-D-2:	
Rated voltage	250 V
Overvoltage category/pollution degree	III/2
Rated impulse voltage	4 kV
Protective separation (reinforced insulation) between	(A1, A2) - (k, l, T/R) - (11, 12, 14) - (21, 22, 24)
Voltage tests acc. to IEC 61010-1	2.21 kV

Supply voltage

MRCDB42-D-1:	
Supply voltage range U_s	AC 24…60 V/DC 24…78 V
Operating range supply voltage U_s	AC 16…72 V/DC 9.6…94 V
Frequency range U_s	DC, 42…460 Hz
MRCDB423-D-2:	
Supply voltage range U_s	AC/DC 100…250 V
Operating range supply voltage U_s	AC/DC 70…300 V
Frequency range U_s	DC, 42…460 Hz
Power consumption	≤ 6.5 VA

Measuring circuit

External measuring current transformer type	CTUB101 - CTBCxx(P); CTUB101 - CTBCxxx(P)
Rated voltage (measuring current transformer)	800 V
Operating characteristic type B in accordance with IEC 60755	type B
Rated frequency	0…2000 Hz
Operating uncertainty	0…35 %

Response values

Rated residual operating current $I_{\Delta n1}$	50…100 % of $I_{\Delta n2}$ (50 %)*
Rated residual operating current $I_{\Delta n2}$	30 mA…3 A (30 mA)*

Time response

Start-up delay t	(1 s)*
Response delay t_{on1}	0…10 s (1 s)*
Response delay t_{on2}	0…10 s (0 s)*
Operating time t_{ae} at $I_{\Delta n} = 1 \times I_{\Delta n1/2}$	≤ 180 ms
Operating time t_{ae} at $I_{\Delta n} = 5 \times I_{\Delta n1/2}$	≤ 23 ms
Response time t_{an}	$t_{an} = t_{ae} + t_{on1/2}$
Recovery time t_b	≤ 300 ms

Displays, memory

Display range measured value AC/DC	0…6 A
Error of measured value indication	±17.5 %/±2 digits
Measured-value memory for alarm value	Data record measured values
Password	off/0…999 (on)*
Fault memory output relay	yes

Inputs/outputs

Cable length for external test/reset button	0…3 m
Cable length for measuring current transformer connection	0…3 m

Switching elements

Number of switching elements					2 x 1 changeover contact
Operating principle					N/C operation
Electrical endurance, number of cycles					10000
Contact data acc. to IEC 60947-5-1:					
Utilisation category	AC-13	AC-14	DC-12	DC-12	DC-12
Rated operational voltage	230 V	230 V	24 V	110 V	220 V
Rated operational voltage UL	200 V	200 V	24 V	110 V	200 V
Rated operational current	5 A	3 A	1 A	0.2 A	0.1 A
Minimum contact rating					1 mA at AC/DC ≥ 10 V

Environment/EMC

EMC	IEC 60947-2 annex M (limit value class A according to CISPR11)
Operating temperature	-25…+55 °C
Transport	-25…+70 °C
Long-term storage	-25…+55 °C
Classification of climatic conditions acc. to IEC 60721	
Stationary use (IEC 60721-3-3)	3K23 (except condensation and formation of ice)
Transport (IEC 60721-3-2)	2K11
Long-term storage (IEC 60721-3-1)	1K22
Classification of mechanical conditions acc. to IEC 60721	
Stationary use (IEC 60721-3-3)	3M11
Transport (IEC 60721-3-2)	2M4
Long-term storage (IEC 60721-3-1)	1M12

Connection

Connection type	screw-type terminals
Connection properties:	
Rigid/flexible	0.2…4/0.2…2.5 mm² (AWG 24…12)
Multi-conductor connection (2 conductors with the same cross section):	
Rigid/flexible	0.2…1.5/0.2…1.5 mm²
Stripping length	8…9 mm
Tightening torque	0.5…0.6 Nm

Other

Operating mode	continuous operation
Position of normal use	display-oriented
Degree of protection, internal components (IEC 60529)	IP30
Degree of protection, terminals (IEC 60529)	IP20
Enclosure material	polycarbonate
Flammability class	UL94V-0
DIN rail mounting acc. to	IEC 60715
Screw fixing	2 x M4 with mounting clip
Documentation number	D00396
Weight	≤ 150 g

( )* = Factory setting

Ordering details

MRCDB423

Response range $I_{\Delta n}$	Rated frequency	Supply voltage U_s[1]		Type	Art. No.
		DC	AC		
30 mA…3 A	0…2000 Hz	DC 9.6…94 V	16…72 V, AC 42…460 Hz	MRCDB423-D-1	B94043055
		DC 70…300 V	70…300 V, AC 42…460 Hz	MRCDB423-D-2	B94043056

[1] Absolute values of the voltage range

External measuring current transformers

CT diameter	Shield	Type	Art. No.
ø 20	–	CTUB101-CTBC20	B78120010
	■	CTUB101-CTBC20P	B78120020
ø 35	–	CTUB101-CTBC35	B78120012
	■	CTUB101-CTBC35P	B78120022
ø 60	–	CTUB101-CTBC60	B78120014
	■	CTUB101-CTBC60P	B78120024
ø 120	–	CTUB101-CTBC120	B78120016
	■	CTUB101-CTBC120P	B78120026
ø 210	–	CTUB101-CTBC210	B78120018
	■	CTUB101-CTBC210P	B78120028

Installation instructions

All current-carrying cables must be routed together through the measuring current transformer.
Never route an existing protective conductor through the measuring current transformer.

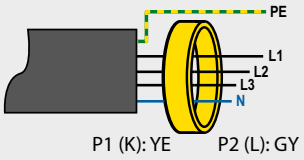

The primary conductors may only be bent from the specified minimum distance. The minimum bending radius specified by the manufacturers must be observed.

* Distance to 90° angle = 2 x external diameter

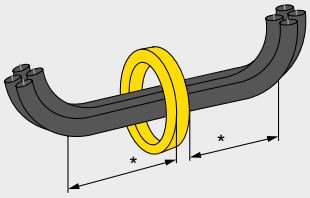

The cables must be centred in the measuring current transformer.

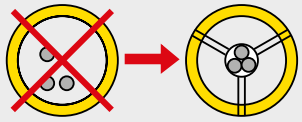

To prevent nuisance tripping, the measuring current transformers should not be completely filled with cables.
The internal diameter of the current transformer should be at least twice the diameter of the conductor bundle to be measured.

The following applies: d2 ≥ 2 x d1

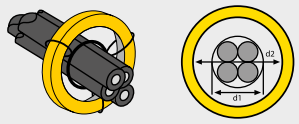

Bender GmbH & Co. KG
Londorfer Straße 65 • 35305 Grünberg • Germany
Tel.: +49 6401 807-0 • info@bender.de • www.bender.de

BENDER Group

MRCDB423_D00396_01_D_XXEN / 08.2021 / © Bender GmbH & Co. KG, Germany – subject to change! The specified standards take into account the edition valid until 08.2021 unless otherwise indicated.