MRCDB300 series

AC/DC sensitive residual current monitoring module
for MRCD applications



MRCDB300-series_D00343_06_D_XXEN/07.2024

BENDER



Device features

- Structure of a protective device in accordance with IEC 60947-2 Annex M in combination with a circuit breaker providing isolating properties
- Monitoring of the connected circuit breaker by means of contact feedback
- RS-485 interface with Modbus RTU (reading out measured values/setting parameters)
- Integrated switching outputs with two changeover contacts K1 and K2 (galvanically isolated)
- Fulfils the protection goals protection of persons, fire protection and plant protection (depending on the variant)
- Frequency range (depending on the variant) DC…100 kHz
- Combined test and reset button
- Multicolour LED indicating operation, exceeded response value, disturbances and status messages
- AC/DC sensitive type B measured value acquisition acc. to IEC 60755 (depending on the variant)
- AC/DC sensitive type B+ measured value acquisition acc. to VDE 0664-400 (depending on variant)
- Exchangeable electronic enclosure without mechanical separation of the primary conductors
- Extension/retrofitting or modification of functionalities in case of changed monitoring requirements
- Insensitive to load currents due to full magnetic shield (CTBC…**P** only)
- Connection monitoring of the measuring current transformer with cyclical test current
- Use of all MRCDB30… for all CTBC… measuring current transformer sizes
- Supply voltage DC 24 V

Intended use

The AC/DC sensitive residual current monitors of type MRCDB300 series are used in combination with a CTBC… measuring currentt transformer and a circuit breaker according to IEC 60947-2 as additional protection in industrial power supplies. According to IEC 60364-5-53, the use in earthed power supplies (TN and TT systems) up to 800 V is possible. These devices are suitable for monitoring AC and DC fault currents (type B).

Any other use than that described in this document is regarded as improper.

Functional description

Residual current $I_{\Delta n}$

The residual current monitoring module measures both AC and DC currents. Tripping takes place based on the determined r.m.s. value. When the response value set for $I_{\Delta n2}$ (main alarm) is exceeded by a residual current, the output relay K2 switches an undervoltage release (recommended) or a shunt release (N/O operation) within the required tripping time and the LED lights up red. If the fault memory behaviour of relay K1 or K2 is activated, the device must be reset by pressing the "T" button. The MRCD module automatically checks the measuring current transformer and the function of the residual current measurement cyclically.

Offset calibration

When the device has been installed, an offset calibration must first be carried out. After successful offset calibration, the multicolour LED lights up green and the device is ready for operation.

Test

Press the "T" button or the external test button for 5…10 s to start the manual self test of the device.

Reset

Press the "T" button or the external test button for 1.5...5 s to reset the device.

Contact feedback

The contact feedback ensures that the circuit breaker is in the desired switching state.

RS-485 interface

The RS-485 interface enables both reading out the measured values and setting the parameters of the device via Modbus RTU. Furthermore, a test or a reset can be triggered via the bus.

Switch-off control

After a main alarm, the measured I_{Δ} (r.m.s.) must be lower than 0.5 x $I_{\Delta n}$ of the smallest alarm limit value active via alarm assignment, so that K2 switches on again. If the residual current is permanently higher, this is a sign of a welded contactor or incorrect wiring. The device displays an error (error code: 0.56).

Variants

Electronic modules

- **MRCDB301**
  Type B modular residual current protective device acc. to IEC 60755 for the protection of persons in case of indirect contact, response value 30 mA
- **MRCDB302**
  Type B+ modular residual current protective device acc. to VDE 0664-100 for fire protection, response value 300 mA
- **MRCDB303**
  Modular residual current protective device for plant protection (N/C operation), freely configurable
- **MRCDB304** (only on request)
  Modular residual current protective device for plant protection (N/O operation), freely configurable
- **MRCDB305**
  Modular residual current protective device type B acc. to IEC 60755 for the protection of persons in case of indirect contact; for applications with pulse-shaped, very high peak load currents (> 1 kA for < 1 s), e.g. welding applications, response value 30 mA

Measuring current transformers (P = shielded)

- **CTBC20(P)**
  Measuring current transformer, internal diameter 20 mm
- **CTBC35(P)**
  Measuring current transformer, internal diameter 35 mm
- **CTBC60(P)**
  Measuring current transformer, internal diameter 60 mm
- **CTBC120(P)**
  Measuring current transformer, internal diameter 120 mm
- **CTBC210(P)**
  Measuring current transformer, internal diameter 210 mm

Device view MRCDB30…

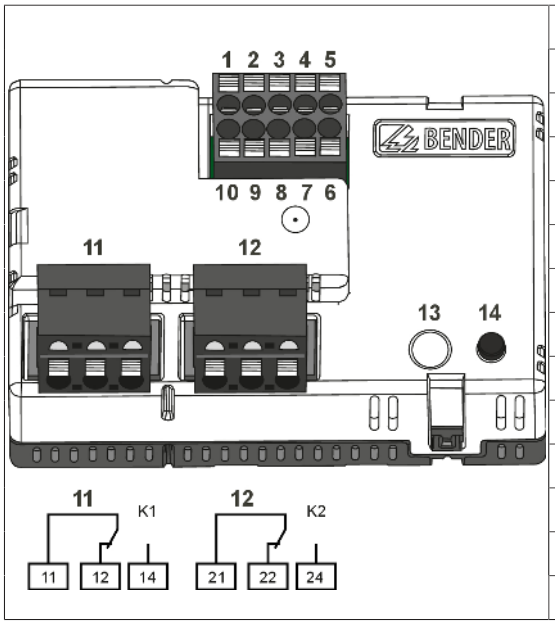

1	D1	Contact feedback
2	DG	
3	A	RS-485 interface
4	B	
5	X1	Terminals for cable bridge for connection of the integrated terminating resistor of the RS-485 interface
6	X2	
7	GND	Connection external test/reset
8	T/R	
9	GND	Supply voltage U_s
10	24 V	
11	11, 12, 14	Relay K1 (prewarning)
12	21, 22, 24	Relay K2 (main talarm)
13	ON/AL	Combined LED; see System states: LED and output relays
14	T	Test and reset button "T"

Wiring diagrams

The following applies to all wiring diagrams:

- The use of a type 2 surge protection device (SPD) is mandatory due to possible impulse voltages and in order to comply with normative requirements.
- The surge protection device must be connected upstream of the power supply unit on the supply side.
- Features of the surge protection device
  – Nominal discharge current In (8/20 µs): 20 kA
  – Response time: 25 ns
  – Two-stage: 1 varistor + 1 spark gap

Alternatively, the power supply unit can be connected to a CAT II supply without a surge protection device.

The power supply unit must be connected before the switch.

N/C principle without contact feedback

Wiring diagram MRCDB30… (N/C principle without contact feedback)

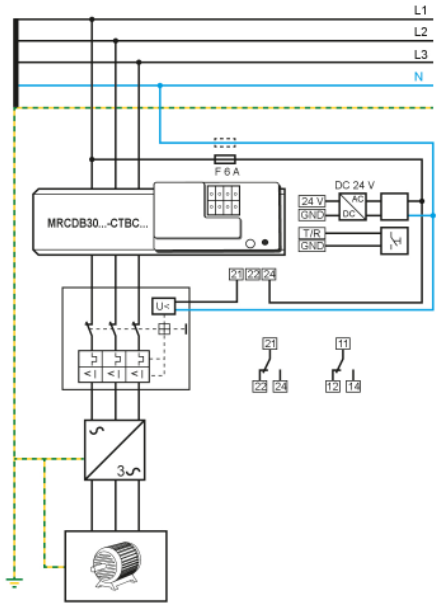

Legend

11, 12, 14 = Relay for prewarning

21, 22, 24 = Relay for main alarm

☐ = surge protection device

N/C principle with contact feedback

Wiring diagram MRCDB30… (N/C principle with contact feedback)

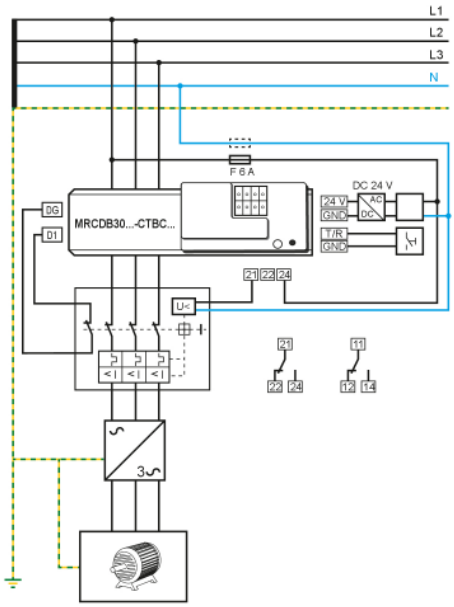

Legend

11, 12, 14 = Relay for prewarning

21, 22, 24 = Relay for main alarm

☐ = surge protection device

The contact feedback ensures that the trip circuit is in the desired switching state. If due to events such as
- burnt relay contacts (K2) on the MRCDB30…
- mechanical jam of the circuit breaker
- incorrect wiring

no separation at the circuit breaker takes place, the feedback signal contacts (D1/DG) cannot signal a change of state. A failure of the trip circuit, which would otherwise go undiscovered, is detected immediately. This information can be forwarded via the RS-485 interface or relay K1 to a control centre.

N/O principle without contact feedback

Wiring diagram MRCDB30… (N/O principle without contact feedback)

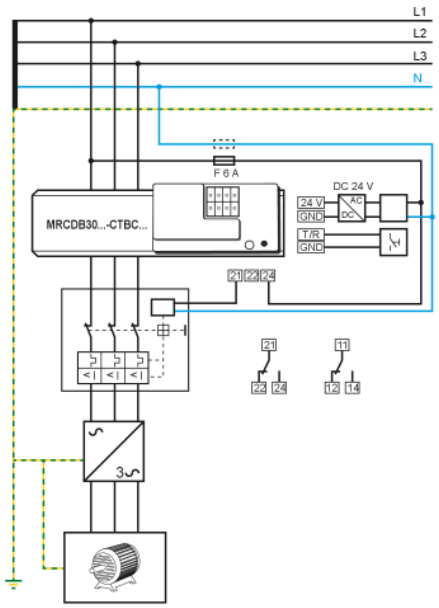

Legend	11, 12, 14 = Relay for prewarning	21, 22, 24 = Relay for main alarm	☐ = surge protection device

N/O principle with contact feedback

Wiring diagram MRCDB30… (N/O principle with contact feedback)

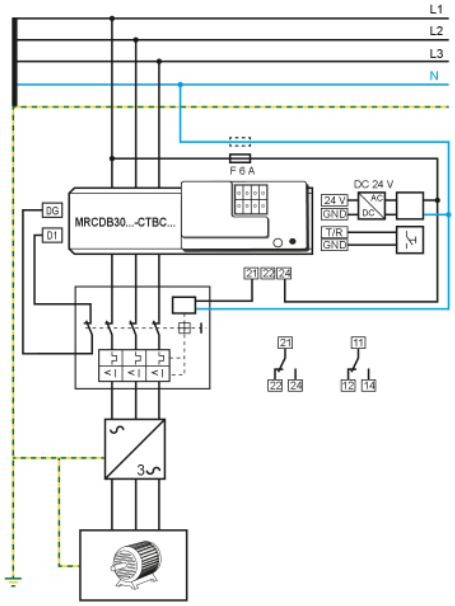

Legend	11, 12, 14 = Relay for prewarning	21, 22, 24 = Relay for main alarm	☐ = surge protection device

We **recommend operating the alarm relay K1 according to the N/C principle**. This allows detecting and reporting the failure of the supply voltage and the internal power supply unit.

For economical installation reasons, alarm relay K2 can be operated according to the **N/O principle**. Due to this operating principle, the following aspects should be observed **to minimise the risks**:
1. The risk assessment intervals should be shorter.
2. Due to the **contact feedback** via the measuring inputs D1 and DG, the following fault types are detected and signalled as alarms via the alarm relay K1:
– Interruption of the connecting line from the alarm relay K2 to the shunt release (N/O operation)
– Mechanically defective circuit breaker
– Defective output relay K2 for controlling the shunt release (N/O operation)

Connection RS-485 interface (Modbus RTU)

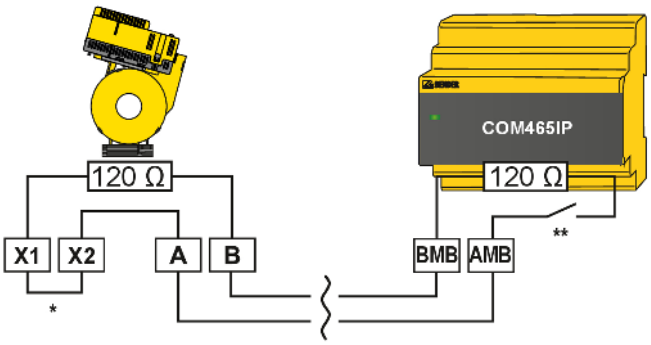

* The internal 120 Ω terminating resistor can be connected by using the **wire jumper**.

** The internal 120 Ω terminating resistor can be connected by means of the **DIP switch**.

System states: LED and output relays

The LED indicates the system state by means of colours and lighting/flashing. The changeover contacts of relay outputs K1 and K2 have defined switching positions for each system state.

System state	LED		Notes	Changeover contact	
	ON (green)	Alarm (red)		K1	K2
Device switched off	off	off	Device is de-energised, no monitoring, no monitoring function	de-energised	de-energised
Normal operating state	lights	off	The device is supplied with the specified voltage and monitors the primary circuit. No residual current flows which would lead to tripping.	energised	energised
Prewarning	lights	flashes briefly	The device is supplied with the specified voltage and monitors the primary circuit. A fault current flows which exceeds the set limit of the prewarning.	de-energised	energised
Main alarm	off	lights	The device is supplied with the specified voltage and monitors the primary circuit. A fault current flows which exceeds the set limit of the main alarm.	de-energised	de-energised
Device error	off	flashes slowly	The device is supplied with the specified voltage and monitors the primary circuit. An error is detected by the periodic self tests.	de-energised	de-energised

Dimension diagrams

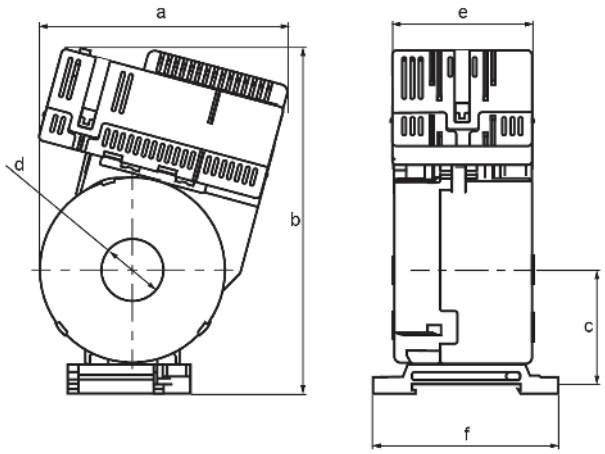

CTBC20(P) / CTBC35(P)

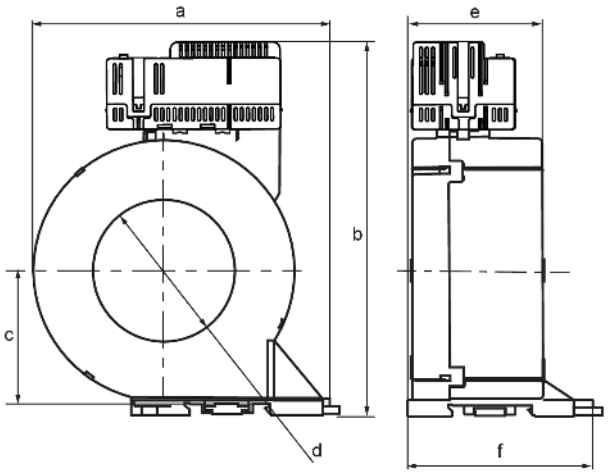

CTBC60(P)

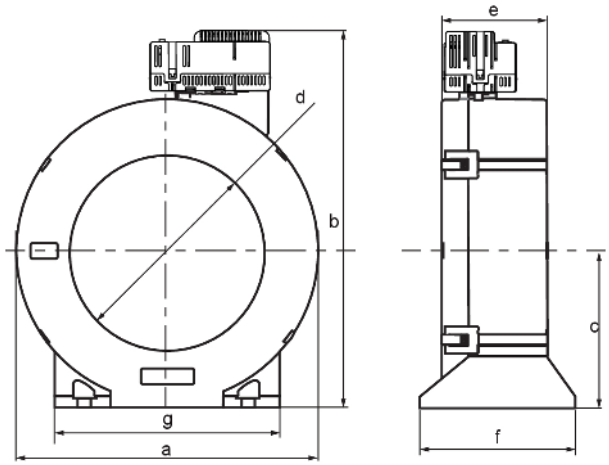

CTBC120(P) / CTBC210(P)

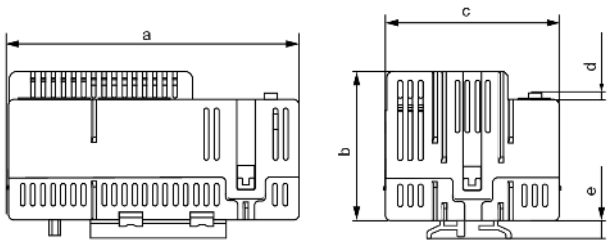

MRCDB30…

Type	a	b	c	d	e	f	g
MRCDB30…-CTBC20(P)	81	112	37	ø 20	46	60	
MRCDB30…-CTBC35(P)	97	130	47	ø 35	49	61	
MRCDB30…-CTBC60(P)	126	158	57	ø 60	56	78	
MRCDB30…-CTBC120(P)	188	232	96	ø 120	65	96	139
MRCDB30…-CTBC210(P)	302	346	153	ø 210	67	113	277
MRCDB30…	74	37	44	2	4.6		

all dimensions in mm, tolerance ±0.5 mm

Mountings

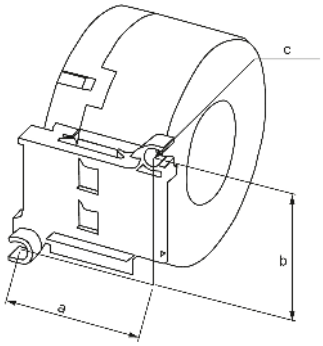

CTBC20(P) / CTBC35(P)

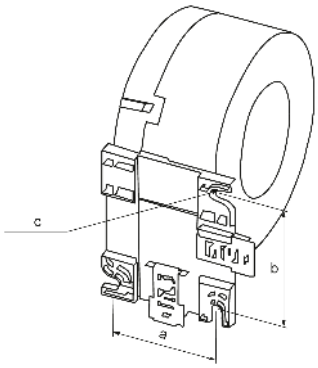

CTBC60(P)

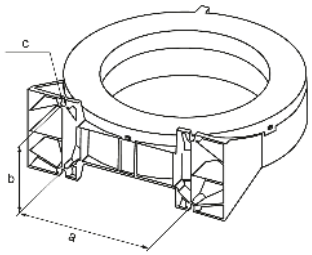

CTBC120(P) / CTBC210(P)

Type	a	b	c
CTBC20(P)	31.4	49	2 x ø 5.5
CTBC35(P)	49.8	49	2 x ø 5.5
CTBC60(P)	56	66	2 x ø 6.5
CTBC120(P)	103	81	4 x ø 6.5
CTBC210(P)	180	98	4 x ø 6.5

all dimensions in mm, tolerance ±0.5 mm

Example for the composition of an MRCD module



Evaluation unit: MRCDB30…

Measuring current transformer: CTBC35

Final MRCD module

Installation instructions for measuring current transformers

CAUTION

Device damage due to high induction currents!
High currents can be induced into the conductor loop due to the AC/DC sensitive measurement technology used. Do not route protective conductors and low-resistance conductor loops through the measuring current transformer!

Device damage due to interference pulses!
The connecting cable (supply, analogue interface…) must not be routed directly past the current transformer core.

Risk of injury due to accessible live conductors!
The measuring current transformer must be connected to the corresponding evaluator before the first use and before commissioning of the monitored system.

Application in railway vehicles / DIN EN 45545-2:2016

If the distance to adjacent components that do not meet the requirements of DIN EN 45545-2 Table 2 is < 20 mm horizontally or < 200 mm vertically, they are to be considered grouped.
Refer to DIN EN 45545-2 chapter 4.3 Grouping rules.

Do not route any shielded cables through the measuring current transformer!

Live conductors

Ensure that **all live cables/conductors** are routed through the measuring current transformer.

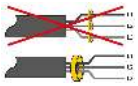

Protective conductors

Never route an existing protective conductor through the measuring current transformer. The cable diameter should not exceed half the diameter of the measuring current transformer.

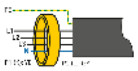

Bending of cables

The cables/conductors should only be bent at a certain distance from the measuring current transformer.
* Distance to the 90° angle of the conductors: 2 x outer diameter of the measuring current transformer.

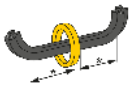

Route cables in the centre

The cables/conductors must be centred in the middle of the measuring current transformer.

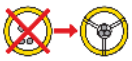

Technical data

( )* = factory setting

Insulation coordination acc. to IEC 60664-1/IEC 60664-3

Definitions

Measuring circuit (IC1)	Primary conductors routed through the current transformer
Secondary (IC2)	Terminal block 1 (24 V, GND, D1, DG, T/R, GND, A, B, X1, X2)
Control circuit 1 (IC3)	Terminal block 2 (11, 12, 14)
Control circuit 2 (IC4)	Terminal block 3 (21, 22, 24)
Rated insulation voltage	800 V
Overvoltage category	III
Pollution degree	2
Operating altitude	≤ 2000 m AMSL

Rated impulse voltage

IC1/(IC2-IC4)	8 kV
IC2/(IC3-IC4)	4 kV
IC3/IC4	4 kV

Rated insulation voltage

IC1/(IC2-IC4)	800 V
IC2/(IC3-IC4)	250 V
IC3/IC4	250 V

Safe isolation (reinforced insulation) between

IC2/(IC3-IC4)	300 V

Basic insulation between

IC1/(I2-IC4)	800 V
IC3/IC4	300 V

Voltage tests (routine test) acc. to IEC 61010-1

IC2/(IC3-IC4)	AC 2.2 kV
IC3/IC4	AC 2.2 kV

Supply voltage

Supply voltage U_S	DC 24 V
Operating range of U_S	±20 %
Ripple U_S	≤ 1 %
Power consumption	≤ 2.5 W
Inrush current	1.7 A for 1 ms

Measuring circuit

Internal diameter measuring current transformer	see "Dimension diagrams", Page 7
Characteristics according to IEC 62020 and IEC/TR 60755	AC/DC sensitive, type B
Response value $I_{\Delta n}$	
MRCDB301 (protection of persons)	30 mA
MRCDB302 (fire protection)	300 mA
MRCDB303 (plant protection)	30 mA…3 A (freely configurable), (30 mA)*
MRCDB305 (protection of persons)	30 mA
Prewarning	50…100 % $I_{\Delta n}$ (freely configurable), (60 %)*
Rated current I_n	
CTBC20 at $I_{\Delta n}$ = 30 mA	40 A
CTBC20 bei$I_{\Delta n}$ = 300 mA	63 A
CTBC20P	80 A
CTBC35 at $I_{\Delta n}$ = 30 mA	80 A
CTBC35 at $I_{\Delta n}$ = 300 mA	125 A
CTBC35P	160 A
CTBC60 at $I_{\Delta n}$ = 30 mA	160 A
CTBC60 at $I_{\Delta n}$ = 300 mA	250 A
CTBC60P	320 A
CTBC120 at $I_{\Delta n}$ = 100 mA	330 A
CTBC120P at $I_{\Delta n}$ = 100 mA	630 A
CTBC210 at $I_{\Delta n}$ = 300 mA	630 A
CTBC210P at $I_{\Delta n}$ = 100 mA	630 A
CTBC210P at $I_{\Delta n}$ = 300 mA	1000 A
Operating uncertainty	±17.5 %
Relative uncertainty	0…–35 %
Test winding	yes

Possible response values (to be set on the evaluator)

CTBC20, CTBC20P	10…500 mA
CTBC35, CTBC35P, CTUBC60, CTBC60P	30 mA…10 A
CTBC120P, CTBC210P	100 mA…10 A
CTBC120, CTBC210	300 mA…10 A

Time response

Response delay t_{on}	
MRCDB301, MRCDB302, MRCDB304, MRCDB305	0 s
MRCDB303	0 s…60 min (freely configurable), (0 s)*
Start-up delay t	0 s…60 min (freely configurable), (0 s)*
Delay on release t_{off}	2 s after reset
Operating time t_{ae}	
at 1 x $I_{\Delta n}$	≤ 180 ms
at 2 x $I_{\Delta n}$	≤ 130 ms
at 5 x $I_{\Delta n}$	≤ 20 ms
Response time	$t_{an} = t_{ae} + t_{on}$
Recovery time t_b	≤ 1 s

Indication

Multicolour LED	red/green, Refer to "System states: LED and output relays", Page 6

Inputs

Label	T/R, GND, D1, DG
Maximum length connecting cable	10 m

Outputs

Number of changeover contacts	2
Relay mode	
MRCDB301, MRCDB302, MRCDB305	N/C principle
MRCDB303	N/C principle or N/O principle, (freely configurable), (N/C principle)*
Switching outputs (K1, K2)	250 V, 5 A
Switching capacity	1500 VA / 144 W
Contact data acc. to IEC 60947-5-1	
Rated operational voltage AC	250 V/250 V
Utilisation category	AC-13/AC-14
Rated operational current AC	5 A/3 A
Rated operational current AC (for UL applications)	3 A/3 A
Rated operational voltage DC	220/110/24 V
Utilisation category	DC12
Rated operational current DC	0.1/0.2/1 A
Minimum current	10 mA at DC 5 V
Electrical endurance, number of cycles	10.000

Environment/EMC

EMC	IEC 60947-2 Annex M
Operating temperature	–25…70 °C

Classification of climatic conditions acc. to IEC 60721

Stationary use (IEC 60721-3-3)	3K23
Transport (IEC 60721-3-2)	2K11
Long-term storage (IEC 60721-3-1)	1K22

Classification of mechanical conditions acc. to IEC 60721

Stationary use (IEC 60721-3-3)	3M11
Transport (IEC 60721-3-2)	2M4
Long-term storage (IEC 60721-3-1)	1M12

Connection

Required terminals are included in the scope of delivery .

Terminal block 1	
Manufacturer	Phoenix Contact
Type	DFMC 1,5/5-ST-3,5 BK
The connection conditions of the manufacturer apply.	
Connection properties	
rigid	0.2…1.5 mm² (AWG 24…16)
flexible	0.2…1.5 mm² (AWG 24…16)
with ferrules	0.25…0.75 mm² (AWG 24…19)
Terminal block 2, 3	
Manufacturer	Phoenix Contact
Type	FKCVW 2,5/ 3-ST-5,08
The connection conditions of the manufacturer apply.	
Connection properties	
rigid	0.2…2.5 mm² (AWG 24…13)
flexible	0.2…2.5 mm² (AWG 24…13)
with ferrules	0.25…2.5 mm² (AWG 24…13)

Mounting CTBC…

Screw type	
CTBC20…60(P)	DIN EN ISO 7045 - M5
CTCB120…210(P)	DIN EN ISO 7045 - M6
Washer type	
CTBC20…60(P)	DIN EN ISO 7089/7090 - 5
CTCB120…210(P)	DIN EN ISO 7089/7090 - 6
Tightening torque	
CTBC20…35 (P)	0.6 Nm
CTCB60…210(P)	1 Nm

Other

Operating mode	continuous operation
Mounting	any position
Degree of protection, internal components (DIN EN 60529)	IP40
Degree of protection, terminals (DIN EN 60529)	IP20
Flammability class	UL94 V-0
Software	D0579

Weight

MRCDB30…	≤ 100 g
CTBC20	≤ 160 g
CTBC20P	≤ 220 g
CTBC35	≤ 240 g
CTBC35P	≤ 320 g
CTBC60	≤ 460 g
CTBC60P	≤ 620 g
CTBC120	≤ 1390 g
CTBC120P	≤ 1750 g
CTBC210	≤ 4220 g
CTBC210P	≤ 4870 g

Standards and certifications

Ordering details

Electronic modules

Supply voltage	Variant	Type	Art.No.
DC 24 V (19.2…28.8 V)	Protection of persons	MRCDB301	B74043120
	Fire protection	MRCDB302	B74043121
	Protection of persons, fire protection and plant protection (freely configurable)	MRCDB303	B74043122
	Plant protection	MRCDB304	On request
	Protection of persons for applications with pulsed, very high peak load currents (> 1 kA for < 1 s), e.g. welding applications	MRCDB305	B74043125

Measuring current transformers

Type	Description	Art. No.
CTBC20	Measuring current transformer, internal diameter 20 mm	B98120001
CTBC20P	Measuring current transformer shielded, internal diameter 20 mm	B98120002
CTBC35	Measuring current transformer, internal diameter 35 mm	B98120003
CTBC35P	Measuring current transformer shielded, internal diameter 35 mm	B98120004
CTBC60	Measuring current transformer, internal diameter 60 mm	B98120005
CTBC60P	Measuring current transformer shielded, internal diameter 60 mm	B98120006
CTBC120	Measuring current transformer, internal diameter 120 mm	B98120007
CTBC120P	Measuring current transformer shielded, internal diameter 120 mm	B98120020
CTBC210	Measuring current transformer, internal diameter 210 mm	B98120008
CTBC210P	Measuring current transformer shielded, internal diameter 210 mm	B98120021

Accessories

Description	Art. No.
USB to RS-485 interface converter	B95012045
Terminal set for MRCD module *	B74043124
Snap-on mounting for CTBC20 and CTBC20P *	B91080111
Snap-on mounting for CTBC35 and CTBC35P *	B91080112

* Included in scope of delivery

Suitable system components

Description	Max. number of current transformers	Type	Art. No.
Voltage supply	14	STEP-PS/1 AC/24 DC/1.75	B94053111
	34	STEP-PS/1 AC/24 DC/4.2	B94053112

Bender GmbH & Co. KG

Londorfer Straße 65
35305 Grünberg
Germany

Tel.: +49 6401 807-0
info@bender.de
www.bender.de

© Bender GmbH & Co. KG, Germany
Subject to change!
The specified standards take into account the edition valid until 07.2024 unless otherwise indicated.