LINETRAXX® CEP410R-2

AC and pulsed DC sensitive residual current monitor
at the central earthing point (CEP)



LINETRAXX® CEP410R-2

AC and pulsed DC sensitive residual current monitor at the central earthing point (CEP)



Device features

- Alternating and pulsing current sensitive residual current monitoring device according to DIN EN IEC 62020-1, Type A
- Root mean square measurement (RMS)
- Measuring range: 10 mA…30 A (42…70 Hz)
- Prewarning: 50…100 % of residual operating current
- Supply voltage DC 24 V or AC/DC 100…240 V
- LED-strip measured value display
- Adjustable response delay
- Alarm relay (designed as changeover contact)
- Non-fail-safe current/fail-safe current principle and fault memory behaviour selectable
- RS-485 with Modbus RTU
- Continuous CT-connection monitoring
- NFC interface for device parameter setting with the device energised or de-energised

Intended use

The device CEP410R-2 is intended for use in conjunction with the specified measuring current transformers for AC and pulse current sensitive residual current measurement in accordance with DIN EN IEC 62020-1.

The scope of application is the monitoring of the central earthing point for the detection of PEN bridges and connections between two neutral conductors of two separate TN systems, whereby the measured value is recorded in accordance with its intended use in a range of f = 42...70 Hz.

The devices are designed for operation in control cabinets or in a similarly protected environment.

The specifications in this manual must be observed for proper operation. Any other or additional use is considered improper.

Approvals

Standards & certifications

The CEP410R-2 device has been developed in accordance with the following standards:

- DIN EN IEC 62020-1

CE UKCA

Licences

For a list of the open-source software used see our Homepage.

Declaration regarding the radio system

EU declaration of conformity

Bender GmbH & Co. KG hereby declares that the device covered by the Radio Equipment Directive complies with Directive 2014/53/EU. The full text of the EU Declaration of Conformity is available at the following internet address:

EU declaration of conformity CEP410R

Hereby, Bender GmbH & Co. KG declares that this radio equipment complies with Radio Equipment Regulations 2017 (S.I. 2017/1206). The full text of the UK declaration of conformity is available at the following internet address:

UKCA-Declaration of Conformity CEP410R

Ordering information

Type	Supply voltage U_S	Measuring current transformers that can be used	Art. No.
		Type A	
CEP410R-2	DC 24 V AC/DC 100…240 V	X	B74603008

Accessories	Art. No.
Sealable transparent cover	B80609199

Wiring diagrams

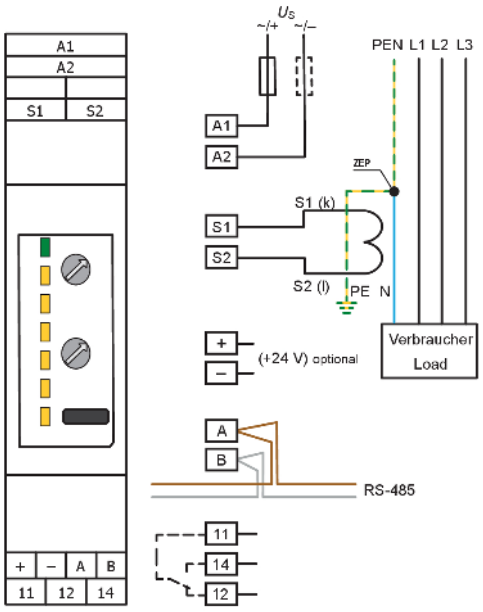

Connections overview

		Terminal	Connection
Top	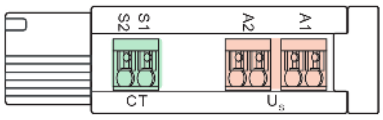	A1, A2 S1, S2	Supply voltage U_S Measuring current transformer
Bottom	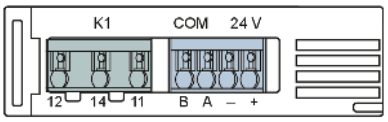	+	DC 24 V
		-	
		A	RS-485 A - Modbus RTU
		B	RS-485 B - Modbus RTU
		11, 14, 12	Alarm relay K1

NFC interface

The NFC interface can be used to transmit a previously configured device parameter setting directly to the device.

This function is available only via the Bender Connect App. You can find this app in the App-stores for iOS and Android.

In the Bender Connect app the device first needs to be made known. Then the device-specific setting options are shown so that they can be configured. When the data is transferred, feedback is given whether the parameter configuration has been successful.
Parameter settings can be transmitted to the device via the Bender Connect app by holding the mobile phone close to the device.
To a **de-energised** device, a parameter setting can be transferred via the Bender Connect app. This setting is then activated automatically when the device is connected to the current supply.
When a device is **plugged in**, too, parameters can be configured via the Bender Connect App. To this end, the NFC interface first needs to be activated in the device.

The NFC interface is activated via the T/R button at the front of the device or via the Modbus interface.

The NFC antenna is located at the front on the righthand side of the CEP410R-2.

Dimension diagrams

Dimensions in mm

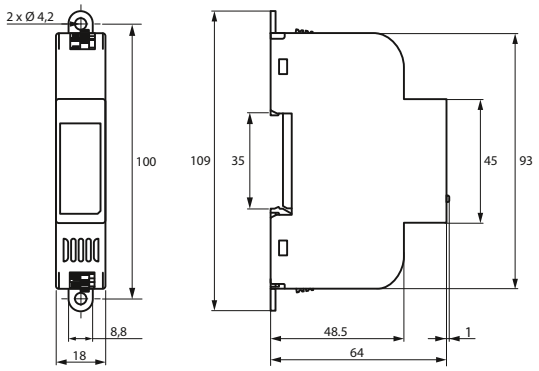

Technical data

()* = Factory setting

Insulation coordination (IEC 60664-1/ IEC 60664-3)

Definitions	
Supply circuit (IC1)	A1, A2
Output circuit (IC2)	11, 12, 14
Measuring & control circuit (IC3)	S1, S2, +, –, A, B
Rated voltage	250 V
Overvoltage category	III
Operating altitude	≤ 2000 m AMSL
Rated impulse voltage	
IC1/(IC2-3)	4 kV
IC2/IC3	4 kV
Rated insulation voltage	
IC1/(IC2-3)	250 V
IC2/IC3	250 V
Pollution degree	2
Protective separation (reinforced insulation) between	
IC1/(IC2-3)	300 V
IC2/IC3	300 V
Voltage test (routine test) acc. to IEC 61010-1	
IC1/(IC2-3)	AC 2.2 kV
IC2/IC3	AC 2.2 kV

Supply voltage

Connection	+, –
Supply voltage U_s	DC 24 V
Tolerance of U_S	–30…+25 %
Power consumption	≤ 2 W
Inrush current (< 5 ms)	< 10 A

Supply voltage

Connection	A1, A2
Supply voltage U_s	AC/DC 100…240 V (47…63 Hz)
Tolerance of U_S	±15 %
Power consumption	≤ 2 W / ≤ 3.5 VA
Inrush current (< 2 ms)	< 1.8 A

Measuring circuit

Burden (internal)	33 Ω
Frequency range	42…70 Hz
Measuring current transformer monitoring [1)]	On/off (on)*
Measuring range (peak)	2 mA…70 A
Measuring range rms	2 mA…50 A
Rated residual operating current	30 A
Response value main alarm $I_{\Delta n}$ [1)]	10 mA…30 A (30 mA)*
Prewarning [1)]	50…100 % x $I_{\Delta n}$ (70 %)*
Operating uncertainty	±10 % (at 0.5…5 x $I_{\Delta n}$)
Relative response uncertainty	6 mA…20 A: -20...0 % 20…30 A: -50...0 %
Rated thermal short-term current	2.4 kA/1 s
Hysteresis [1)]	10…25 % (15 %)*
Fault-memory alarm messages	On/off (on)*

[1)] Can only be configured via RS-485

Measuring current transformers

Connection	CT (S1, S2)
Measuring-current transformer series, type A [1)]	CTAC…, CTAS…, W…, WR…, WS… series
CT connection monitoring	Yes
Rated voltage U_n	See technical data of the measuring current transformer
Rated surge current	6.0 kA/40 ms
Connecting cables	See technical data of the measuring current transformer
Cable lengths	
Single wire ≥ 0.75 mm²	0…1 m
Single wire, twisted ≥ 0.75 mm²	0…10 m
Shielded cable ≥ 0.75 mm²	0…40 m

[1)] For a selection of suitable measuring current transformers, see chapter "Measuring current transformer connection" in the manual

Time response

Start-up delay t	0…900 s (0 s)*
Response delay t_{on}	0…10 s (0 s)*
Delay on release t_{off}	0…900 s (0 s)*
Operating time t_{ae}	
with 1 x $I_{\Delta n}$	≤ 260 ms
with 5 x $I_{\Delta n}$	40…120 ms
Response time t_{an}	$t_{an} = t_{ae} + t_{on}$
Recovery time t_b	≤ 500 ms
Response time for CT connection monitoring	≤ 10 s

Operation

Display	Status LED incl. LED bar graph
Display range, measured value	25 / 50 / 75 / 100 %
Button T/R	Reset / test / NFC / address setting

RS-485 interface

Connection	A, B
Protocol	Modbus RTU
Baud rate	Max. 115.2 kbits/s (19.2 kbits/s)*
Parity	even, no, odd (even)*
Stop bits	1/2/auto (auto)*
Cable length (at 9.6 kbits/s)	≤ 1200 m
Recommended lines, shield on one side connected to PE	min. J-Y(St)Y 2 x 0.6 mm², twisted pair
Required terminating resistor	120 Ω (> 0.25 W)
Device address	1…247 (100 + last two digits of serial number)*

NFC interface

Frequency	13.56 MHz
Transmitting power (modulating; in 0 m distance, e.g.)[1]	0 W

[1]
- EMC influences may lead to communication interruptions at the NFC interface.
- The device does not transmit any radio waves when used as intended.

Switching elements

Relay	1 changeover contact
Connection	11, 12, 14
Operating principle	Fail-safe or Non-fail-safe (Fail-safe)*
Electrical endurance, number of cycles	10000

Contact data acc. to IEC 60947-5-1

Utilisation category	AC-13 / AC-14 / DC-12 / DC-12 / DC-12
Rated operational voltage	230 V / 230 V / 24 V / 110 V / 220 V
Rated operational current	5 A / 3 A / 1 A / 0.2 A / 0.1 A
Minimum contact load Relay manufacturer's reference *(Refers to relays that have not been operated with high contact currents.)*	1 mA at AC/DC ≥ 10 V

EMC/Environment

EMC	DIN EN IEC 62020-1
Operating temperature	-25…+55 °C
Transport	-40…+85 °C
Long-time storage	-40…+70 °C

Classification of climatic conditions acc. to IEC 60721

Stationary use (IEC 60721-3-3)	3K22
Transport (IEC 60721-3-2)	2K11
Long-term storage (IEC 60721-3-1)	1K22

Classification of mechanical conditions acc. to IEC 60721

Stationary use (IEC 60721-3-3)	3M11
Transport (IEC 60721-3-2)	2M4
Long-term storage (IEC 60721-3-1)	1M12

Connection

Terminals	Push-In
Connection properties	
rigid	0.2…1.5 mm² (AWG 24…16)
flexible	0.2…1.5 mm² (AWG 24…16)
with ferrule with plastic sleeve	0.25…0.75 mm²
with ferrule without plastic sleeve	0.75…1.5 mm²
(Use crimping pliers similar to CRIMPFOX 6 / Weidmüller PZ6/PZ6/5 only)	
Stripping length	8 mm

Other

Operating mode	Continuous operation
Mounting	Vertical
Degree of protection (DIN EN 60529)	
terminals	IP20
internal components	IP30
Enclosure material	Polycarbonate
DIN rail mounting acc. to	IEC 60715
Flammability class	UL94 V-0
Weight	≤ 100 g

Bender GmbH & Co. KG

Londorfer Straße 65
35305 Grünberg
Germany

Tel.: +49 6401 807-0
info@bender.de
www.bender.de

© Bender GmbH & Co. KG, Germany
Subject to change!
The specified standards take into account the edition valid until 02.2026 unless otherwise indicated.