AC

Datasheet EN

AGH676S-4

Coupling device



BENDER

AGH676S-4

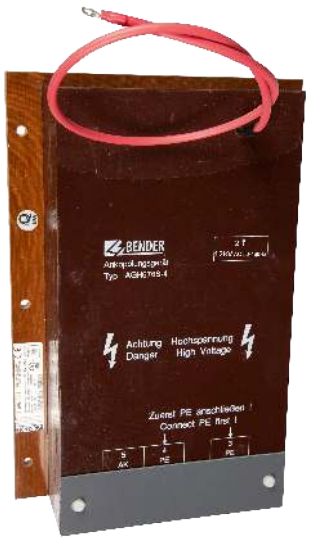

Intended use

The AGH676S-4 is used to connect ISOMETER®s to unearthed AC and 3(N)AC systems from 0…12 kV. The coupling devices are designed for the exclusive use in combination with ISOMETER®s.

Any other use than that described in this manual is regarded as improper.

Functional description

The coupling device AGH676S-4 is used to extend the nominal voltage range of the ISOMETER®s illustrated in the wiring diagram to AC/3(N)AC 50…460 Hz, 0…12 kV.

Certifications

Ordering details

Type	Nominal system voltage U_n	Cable length	Art. No.
AGH676S-4	AC/3(N)AC 0…12 kV, 50…460 Hz	2000 mm	B913055

Wiring diagram

1. **First** connect the terminals E and KE of the ISOMETER® to PE and the terminals 3 and 4 of the coupling device to PE.
2. Connect terminal 5 of the coupling device to terminal AK of the ISOMETER®.
3. Connect terminal 2 of the coupling device to the system to be monitored according to the wiring diagram.

Offline

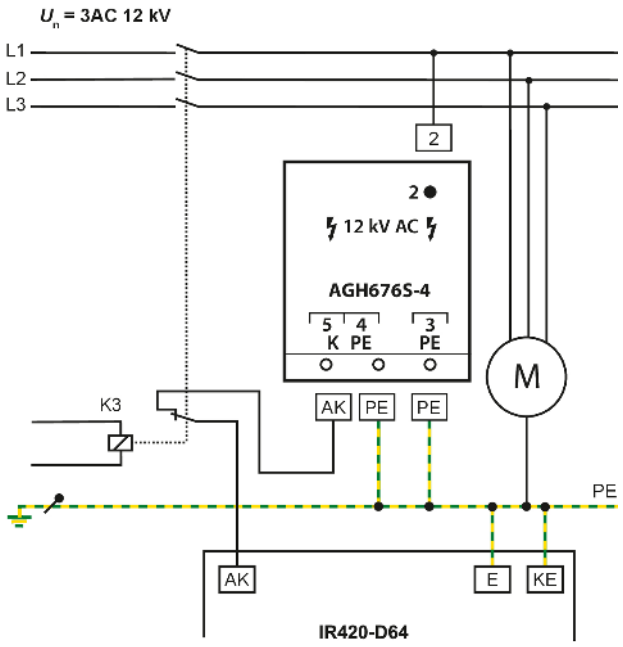

Online

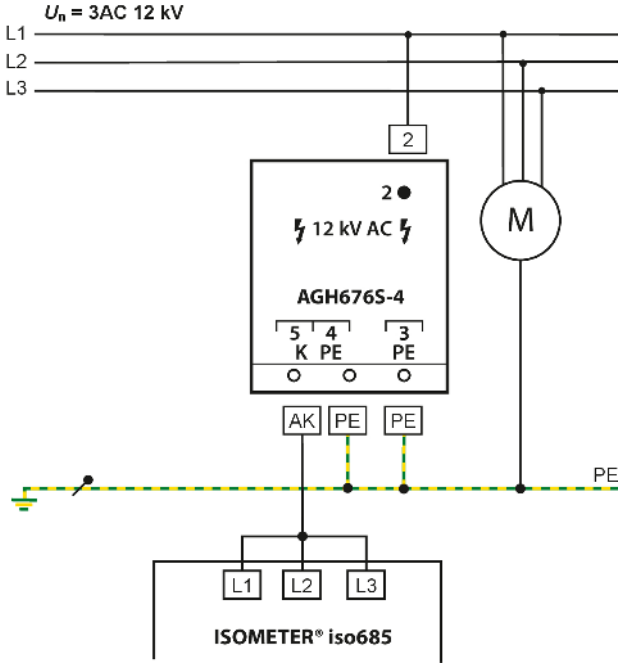

Dimension diagram

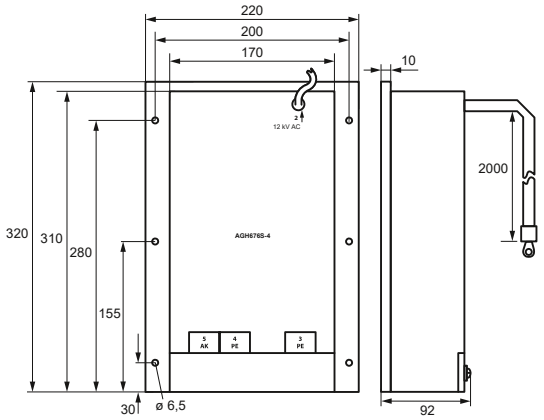

Dimensions in mm

Technical data

Insulation coordination acc. to DIN EN 61800-5-1 (VDE 0160-105-1)

Rated insulation voltage	AC 12 kV

Voltage test acc. to DIN EN 61800-5-1 (VDE 0160-105-1)

Voltage impulse test (basic insulation)	≥ AC 75 kV
AC voltage test (basic insulation)	≥ AC 45 kV
Partial discharge test	≥ 16.5 kV_{eff}
AC voltage test, rate of increase < 2 kV/s	AC 25 kV

Voltage ranges

Nominal system voltage U_n	AC, 3(N)AC 0…12 kV
Nominal frequency f_n	50…460 Hz
Internal DC resistance R_i	≥ 160 kΩ
Impedance Z_i at 12 kV and 50 Hz	≥ 12 MΩ

Environment EMC

Ambient temperature	
Operation	−10…+55 °C
Storage	−20…+70 °C
Shock resistance	
Operation (IEC 60068-2-27)	15 g / 11 ms
Transport (IEC 60068-2-29)	40 g / 6 ms
Vibration resistance acc to IEC 60068-2-6	
Operation	1 g / 10…150 Hz
Transport	2 g / 10…150 Hz
Classification of climatic conditions acc. to IEC 60721-3-3	3K23

Connection

Connection medium voltage	high-voltage cable (encapsulated on the device side)
Connection, flexible with ring terminal	M8
Connection terminals 3-5	screw type terminals
Connection properties rigid/flexible	0.2…4 mm^2/0.2…2.5 mm^2
Anzugsdrehmoment	0.5 Nm

Other

Operating mode	continuous operation
Mounting	any position
Degree of protection	
built-in components (DIN EN 60529)	IP64
terminals (DIN EN 60529)	IP20
Type of enclosure	cast resin encapsulated
Screw mounting	M5
Flammability class	UL 94 HB
Weight	≤ 8400 g

Bender GmbH & Co. KG

Londorfer Straße 65
35305 Grünberg
Germany

Tel.: +49 6401 807-0
info@bender.de
www.bender.de

© Bender GmbH & Co. KG, Germany
Subject to change!
The specified standards take into account the edition valid until 01.2026 unless otherwise indicated.