AGH204S-4

Coupling device



BENDER

AGH204S-4



Intended use

The AGH204S-4 coupling device in conjunction with an ISOMETER® is used for monitoring the insulation of 3AC IT systems (unearthed systems).

Any other use than that described in this manual is regarded as improper.

Functional description

The coupling device AGH204S-4 is used to extend the nominal voltage range of the ISOMETER® series shown in the wiring diagram at terminal AK160 up to 3(N)AC 0…1650 V. At terminal AK80, it extends the range up to 3(N)AC 0…1300 V.

Standards and Certifications

The AGH204S-4 was developed in compliance with the following standards:

- DIN EN 61800-5-1 (VDE 0160-105-1)

Ordering details

Type	Nominal system voltage U_n	Art. No.
AGH204S-4	3(N)AC 0…1650 V	B914013

Wiring diagram

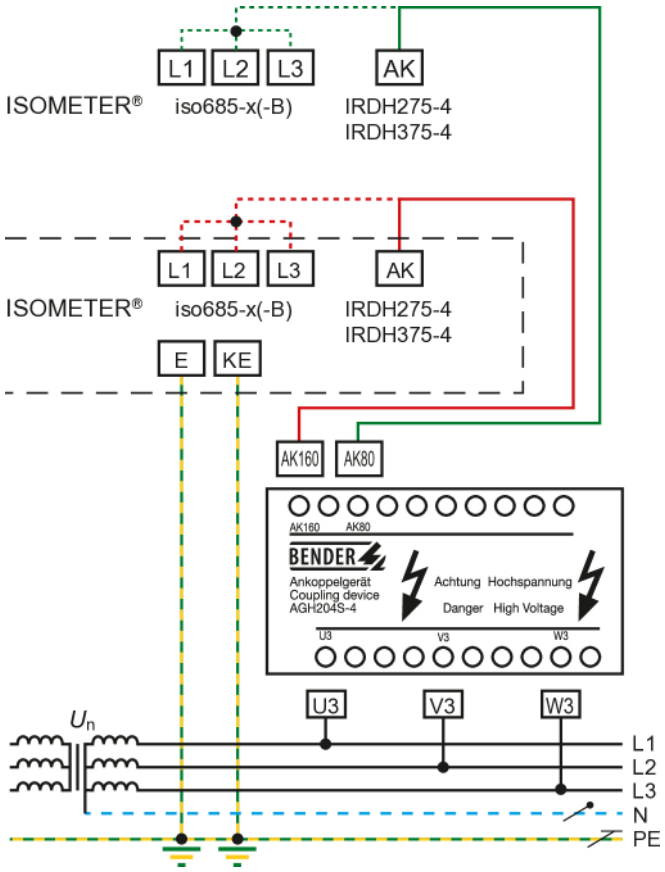

U_n = 3(N)AC 0…1300 V without converters (green)

U_n = 3(N)AC 0…1650 V with converters (red)

NOTICE *The maximum permissible DC link voltage is 1840 V. The AGH204S-4 is not designed for operation or coupling in DC systems.*

In systems with a nominal system voltage of more than 690 V and with overvoltage category III, a fuse for the connection to the system to be monitored must be provided. 2 A fuses recommended.

Technical data

Insulation coordination acc. to DIN EN 61800-5-1 (VDE 0160-105-1)

Rated insulation voltage	AC 1500 V
Rated impulse voltage	10.4 kV
Overvoltage category	III

Voltage test acc. to DIN EN 61800-5-1 (VDE 0160-105-1)

Voltage impulse test (basic insulation)	≥ AC 10.4 kV
AC voltage test (basic insulation)	≥ AC 5 kV
Partial discharge test	≥ 3 kV

Voltage ranges

Nominal system voltage U_n	
incl. DC-components	0…1300 V
AK80	3(N)AC 0…1300 V
AK160	3(N)AC 0…1650 V
for UL applications	AC 0…1500 V
Frequency range of U_n	50…400 Hz
Internal DC resistance R_i	
coupling to AK80	80 kΩ
coupling to AK160	160 kΩ

Environment EMC

Ambient temperature	
Operation	−10…+55 °C
Storage	−40…+70 °C
Classification of climatic conditions acc. to IEC 60721	3K23
Shock resistance	
Operation (IEC 60068-2-27)	15 g / 11 ms
Transport (IEC 60068-2-29)	40 g / 6 ms
Vibration resistance acc to IEC 60068-2-6	
Operation	1 g / 10…150 Hz
Transport	2 g / 10…150 Hz

Connection

Connection terminals	screw type terminals
Connection properties rigid/flexible	0.2…4 mm² / 0.2…2.5 mm²
Tightening torque	0.5 Nm
Conductor sizes (AWG)	24…12
Length connecting lead (ISOMETER® to AGH)	≤ 0.5 m

Other

Operating mode	continuous operation
Mounting	any position
Degree of protection	
built-in components (DIN EN 60529)	IP30
terminals (DIN EN 60529)	IP10
Type of enclosure	X112, free from halogen
Screw mounting	2 × M4
DIN rail mounting acc. to	IEC 60715
Flammability class	UL 94 V-0
Weight	≤ 1350 g

Dimension diagram

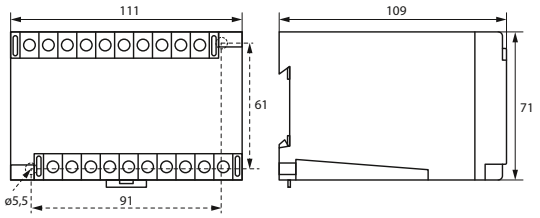

Dimensions in mm

Bender GmbH & Co. KG

Londorfer Straße 65
35305 Grünberg
Germany

Tel.: +49 6401 807-0
info@bender.de
www.bender.de

© Bender GmbH & Co. KG, Germany
Subject to change!
The specified standards take into account the edition valid until 04.2026 unless otherwise indicated.