AC/DC

Datasheet EN

AGH150W(-4)

Coupling device



BENDER

AGH150W(-4)



Intended use

The coupling device AGH150W or AGH150W-4 in combination with an ISOMETER® monitor the insulation resistance of AC and DC IT systems (unearthed systems). To ensure safe operation, all PE connections at the ISOMETER® must be connected with the protective earth conductor.

Any other use than that described in this manual is regarded as improper.

Functional description

The AGH150W coupling device is designed to extend the nominal voltage range of the ISOMETER® iso685xx and IRDH… series to AC 0…1150 V, DC 0…1100 V.

The coupling device is connected to the system to be monitored via two poles and connected via terminal AK160 to terminal AK or terminals L1/L2/L3 of the ISOMETER®.

Standards and Certifications

The AGH150xx was developed in compliance with the following standards:

- DIN EN 45545-2
- DIN EN 50155

only AGH150W-4

Ordering details

Type	Nominal system voltage U_n	Art. No.
AGH150W	AC 0…1150 V, DC 0…1100 V	B915576
AGH150W-4	AC 0…1150 V, DC 0…1760 V	B98018006

Wiring diagram

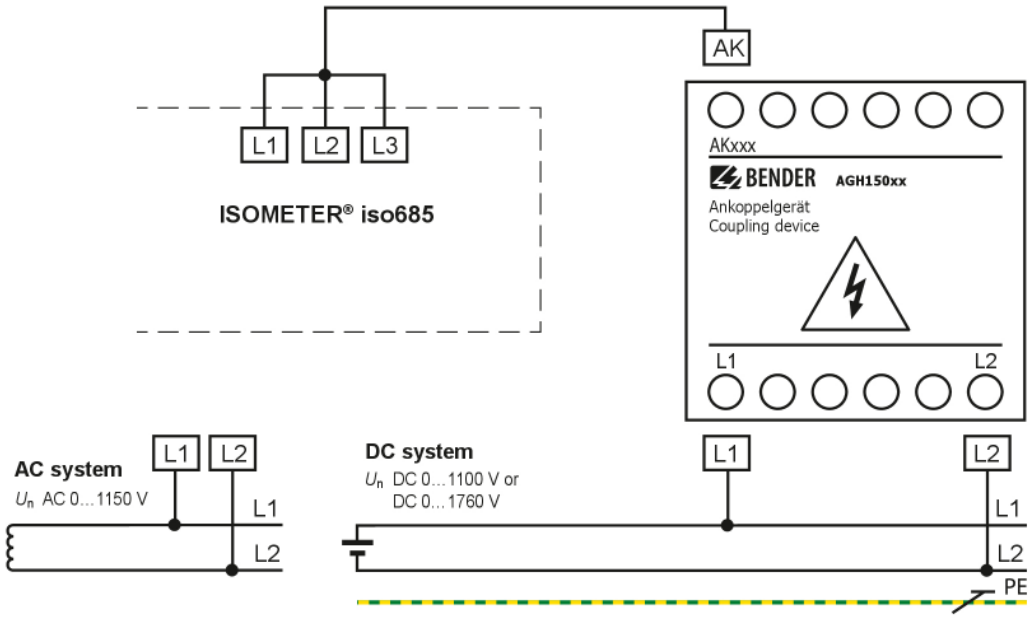

Dimension diagram

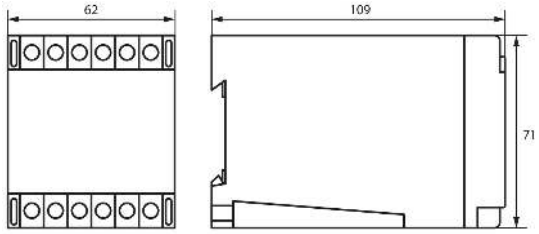

Dimensions in mm

Technical data

Insulation coordination acc. to IEC 60664-1

AGH150W

Rated insulation voltage	AC 1000 V
Voltage test acc. to IEC 60255	12 kV
Pollution degree	2

AGH150W-4

Rated insulation voltage	AC 1600 V
Voltage test acc. to IEC 60255	17 kV
Pollution degree	2

Voltage test acc. to DIN EN 61800-5-1 (VDE 0160-105-1)

AGH150W

Voltage impulse test (basic insulation)	≥ AC 8 kV
AC voltage test (basic insulation)	≥ AC 4.3 kV

AGH150W-4

Voltage impulse test (basic insulation)	≥ AC 11 kV
AC voltage test (basic insulation)	≥ AC 6.6 kV

Voltage range

AGH150W

Nominal system voltage U_n	AC 0…1150 V, DC 0…1100 V
Frequency range of U_n (sinus)	DC 1…460 Hz
Overvoltage category	CAT III
Rated impulse voltage	≥ 8 kV
Internal DC resistance R_i	80 kΩ
Tolerance Internal DC resistance R_i	±2 kΩ*

AGH150W-4

Nominal system voltage U_n	AC 0…1150 V, DC 0…1760 V
for UL applications	DC 0…1600 V
Frequency range of U_n (sinus)	DC 1…460 Hz
Overvoltage category	CAT III
Rated impulse voltage	≥ 11 kV
Internal DC resistance R_i	160 kΩ
Tolerance Internal DC resistance R_i	±4 kΩ*

* The tolerance range affects the measured value of the ISOMETER® used and must be taken into account accordingly.

Environment

Class of extended operating temperature at switch-on	Class ST1
Operating altitude	≤ 2000 m AMSL

Ambient temperatures

Operation	–40…+70 °C
for UL applications	–10…+55 °C
Storage	–40…+70 °C

Classification of climatic conditions acc. to IEC 60721

Stationary use (IEC 60721-3-3)	3K22 (max 98 % humidity)
Transport (IEC 60721-3-2)	2K11
Long-term storage (IEC 60721-3-1)	1K22

Classification of mechanical conditions acc. to IEC 60721

Stationary use (IEC 60721-3-3).	3M11
Transport (IEC 60721-3-2)	2M4
Long-term storage (IEC 60721-3-1)	1M12

Connection

Connection terminals	flat terminals
Connection properties rigid/flexible	0.2…4 mm²/0.2…2.5 mm²

Other

Operating mode	continuous operation
Mounting	any position
Nominal power consumption	≤ 10 W at DC 1760 V
Degree of protection	
built-in components (DIN EN 60529)	IP30
terminals (DIN EN 60529)	IP10
DIN rail mounting acc. to	DIN EN 60715 / IEC 60715
Flammability class	UL94 V-0
Weight	≤ 900 g
Approval UL	AGH150W-4 only

Bender GmbH & Co. KG

Londorfer Straße 65
35305 Grünberg
Germany

Tel.: +49 6401 807-0
info@bender.de
www.bender.de

© Bender GmbH & Co. KG, Germany
Subject to change!
The specified standards take into account the edition valid until 01.2026 unless otherwise indicated.